Board of County Commissioners

Eva J. Henry - District #1
Charles "Chaz" Tedesco - District #2
Emma Pinter - District #3
Steve O'Dorisio - District #4
Mary Hodge - District #5

PUBLIC HEARING AGENDA

NOTICE TO READERS: The Board of County Commissioners' meeting packets are prepared several days prior to the meeting. This information is reviewed and studied by the Board members to gain a basic understanding, thus eliminating lengthy discussions. Timely action and short discussion on agenda items does not reflect a lack of thought or analysis on the Board's part. An informational packet is available for public inspection in the Board's Office one day prior to the meeting.

THIS AGENDA IS SUBJECT TO CHANGE

Tuesday
May 19, 2020
9:30 AM

Watch the virutal meeting through our You Tube Channel
http://www.adcogov.org/events/bocc-public-hearing-9

1. ROLL CALL

2. PLEDGE OF ALLEGIANCE

3. MOTION TO APPROVE AGENDA

4. AWARDS AND PRESENTATIONS

A. Recognition of Ruben Flores

5. PUBLIC COMMENT

A. Citizen Communication

Members of the public may submit written comments on any matter within the Board's subject matter jurisdiction or request to speak at the meeting through our eComment system at https://adcogov.legistar.com/Calendar.aspx

Residents are encouraged to submit comments, prior to the meeting, through written comment using eComment; eComment is integrated with the published meeting agenda and individuals may review the agenda item details and indicate their position on each item. A request to speak at the meeting may also be submitted using the eComment feature. You will be prompted to set up a user profile to allow you to comment, which will become part of the official public record. The eComment period opens when the agenda is published and closes at 4:30 p.m. the Monday prior to the noticed meeting.

B. Elected Officials' Communication

6. CONSENT CALENDAR

A. List of Expenditures Under the Dates of April 27 - May 1, 2020

B. Minutes of the Commissioners' Proceedings from May 12, 2020

C. Resolution Approving an Intergovernmental Agreement between Adams County and the City of Federal Heights Regarding Design and Reconstruction of Traffic Signal, ADA Curb Ramps, and Resurfacing W. 84th Avenue and Pecos Street Intersection
(File approved by ELT)

D. Resolution Approving an Intergovernmental Agreement between the North Washington Street Water and Sanitation District and the County of Adams Regarding the York Street Phase 1 Project
(File approved by ELT)

E. Resolution Approving Right-of-Way Agreement between Adams County and Alejandro Covarrubias for Property Necessary for the 2019 Miscellaneous Concrete and ADA Ramps Project
(File approved by ELT)

F. Resolution Approving the Intergovernmental Agreement between Adams County and the Regional Transportation District
(File approved by ELT)

G. Resolution Approving Private Residential Access Maintenance Agreement between Adams County and Oak Leaf Solar 37, LLC
(File approved by ELT)

H. Resolution Approving the 2020 Agreement between Colorado Rangers Law Enforcement Shared Reserve and the Adams County Sheriff's Office for Training
(File approved by ELT)

7. NEW BUSINESS

A. COUNTY MANAGER

1. Resolution Approving Amendment Two to the Agreement between Adams County and Southwestern Painting & Decorating, Inc. for On-Call Painting Services
(File approved by ELT)

2. Resolution Approving a Purchase Order between Adams County and Power Equipment Company for a BOMAG CR 1030T Paver
(File approved by ELT)

B. COUNTY ATTORNEY

8. Motion to Adjourn into Executive Session Pursuant to C.R.S. 24-6-402(4)(b) and (e) for the Purpose of Receiving Legal Advice and Instructing Negotiators Regarding Yoemans Case

9. ADJOURNMENT

AND SUCH OTHER MATTERS OF PUBLIC BUSINESS WHICH MAY ARISE

County of Adams

Net Warrant by Fund Summary

Fund Number	Fund Description	Amount
1	General Fund	770,558.85
4	Capital Facilities Fund	29,241.69
6	Equipment Service Fund	19,582.31
13	Road & Bridge Fund	81,962.61
19	Insurance Fund	339,120.14
27	Open Space Projects Fund	4,500.00
31	Head Start Fund	9,889.84
34	Comm Services Blk Grant Fund	9,047.49
43	Colorado Air & Space Port	7,971.49
50	FLATROCK Facility Fund	6,053.84
		1,277,928.26

1 General Fund

Warrant	Supplier No	Supplier Name	Warrant Date	Amount
00006076	378404	CARUSO JAMES LOUIS	4/30/2020	3,075.00
00006077	37193	CINA & CINA FORENSIC CONSULTIN	4/30/2020	7,000.00
00006079	1012245	CRESTLINE MEDICAL SUPPLY	4/30/2020	1,540.00
00748474	1010914	ACE HIGH GLASS INC	4/27/2020	4,000.00
00748477	91631	ADAMSON POLICE PRODUCTS	4/27/2020	2,083.59
00748478	414756	AGTERRA TECHNOLOGIES INC	4/27/2020	105.00
00748479	327129	AIRGAS USA LLC	4/27/2020	111.95
00748480	886036	ALL PRO AFFORDABLE FENCE LLC	4/27/2020	8,575.00
00748481	745675	APEX MECHANICAL LLC	4/27/2020	787.84
00748482	3020	BENNETT TOWN OF	4/27/2020	1,500.00
00748483	3020	BENNETT TOWN OF	4/27/2020	1,500.00
00748484	3020	BENNETT TOWN OF	4/27/2020	1,500.00
00748485	463401	BUSH MELVIN E	4/27/2020	65.00
00748489	852482	CLEARWAY ENERGY GROUP LLC	4/27/2020	775.75
00748490	250958	COHEN MILSTEIN SELLERS & TOLL	4/27/2020	236.25
00748491	2381	COLO ANALYTICAL LABORATORY	4/27/2020	38.00
00748493	1909	COLO DOORWAYS INC	4/27/2020	303.14
00748495	209334	COLO NATURAL GAS INC	4/27/2020	642.96
00748496	2157	COLO OCCUPATIONAL MEDICINE PHY	4/27/2020	150.00
00748499	612089	COMMERCIAL CLEANING SYSTEMS	4/27/2020	5,290.00
00748500	13049	COMMUNITY REACH CENTER	4/27/2020	22.94
00748501	42984	CORECIVIC INC	4/27/2020	181,596.60
00748502	930288	CORNELL NICHOLAS	4/27/2020	964.49
00748503	96739	CUMMINS ROCKY MOUNTAIN	4/27/2020	987.72
00748504	58895	DIRSEC	4/27/2020	16,613.81
00748505	181668	DOMINION VOTING SYSTEMS INC	4/27/2020	64,205.13
00748506	430532	EASTERN ADAMS COUNTY METROPOLI	4/27/2020	805.30
00748507	35867	ELDORADO ARTESIAN SPRINGS INC	4/27/2020	70.92
00748509	23417	ERGOMETRICS & APPLIED PERSONNE	4/27/2020	880.55
00748512	47723	FEDEX	4/27/2020	113.52
00748513	671123	FOUND MY KEYS	4/27/2020	1,835.46
00748514	426777	FRANCY LAW FIRM	4/27/2020	15.00
00748515	32005	FRONT RANGE COMMUNITY LEARNING	4/27/2020	55,000.00
00748516	12689	GALLS LLC	4/27/2020	6,339.50
00748517	783632	GAM ENTERPRISES INC	4/27/2020	379.02
00748518	689772	GENEDX INC	4/27/2020	1,500.00

1 General Fund

Warrant	Supplier No	Supplier Name	Warrant Date	Amount
00748520	438625	GOVERNOR'S OFFICE OF IT	4/27/2020	2,237.22
00748521	675517	GREEN THOMAS D	4/27/2020	65.00
00748522	808845	GRONQUIST CHRIS	4/27/2020	65.00
00748524	698488	HANCOCK FORREST HAYES	4/27/2020	65.00
00748525	970284	HARNETT OWEN	4/27/2020	65.00
00748526	350503	HATCH RAY OLSEN SANDBERG	4/27/2020	42.00
00748528	699829	HILL'S PET NUTRITION SALES INC	4/27/2020	1,889.00
00748529	4170	HONNEN EQUIPMENT	4/27/2020	124.53
00748530	418327	IC CHAMBERS LP	4/27/2020	8,071.37
00748532	79260	IDEXX DISTRIBUTION INC	4/27/2020	559.41
00748534	13565	INTERMOUNTAIN REA	4/27/2020	1,707.56
00748535	13565	INTERMOUNTAIN REA	4/27/2020	137.60
00748536	44965	INTERVENTION COMMUNITY CORRECT	4/27/2020	1,510.47
00748537	950388	INVESTIGATIONS LAW GROUP LLC	4/27/2020	43,027.00
00748538	746356	J. BROWER PSYCHOLOGICAL SERVIC	4/27/2020	1,900.00
00748539	1007463	JTC COMMUNICATIONS LLC	4/27/2020	1,000.00
00748540	652983	K&H INTEGRATED PRINT SOLUTIONS	4/27/2020	6,110.37
00748541	1010462	KLEIN TIM	4/27/2020	1,829.00
00748543	92869	LAMAR COMPANIES	4/27/2020	900.00
00748544	40843	LANGUAGE LINE SERVICES	4/27/2020	27.88
00748546	1010466	LEE JR MICHAEL	4/27/2020	1,300.00
00748547	36861	LEXIS NEXIS MATTHEW BENDER	4/27/2020	2,180.99
00748551	1011812	MCCLURE HILL INC	4/27/2020	59,600.00
00748553	1010463	MENDOZA AUTUMN	4/27/2020	150.00
00748554	729564	METRO TRANSPORTATION PLANNING	4/27/2020	3,701.10
00748555	323649	MIDLAND CREDIT MANAGEMENT INC	4/27/2020	19.00
00748557	13591	MWI VETERINARY SUPPLY CO	4/27/2020	275.66
00748558	430881	NEON RAIN INTERACTIVE LLC	4/27/2020	97.50
00748560	124449	NMS LABS	4/27/2020	18,793.00
00748561	42881	NORTHGLENN CITY OF	4/27/2020	56.00
00748562	573416	NYHOLM STEWART E	4/27/2020	65.00
00748563	470643	ONENECK IT SOLUTIONS LLC	4/27/2020	44,220.40
00748564	282112	ORACLE AMERICA INC	4/27/2020	42,048.21
00748565	725673	PACIFIC OFFICE AUTOMATION INC	4/27/2020	16.81
00748566	516994	PARK 12 HUNDRED OWNERS ASSOCIA	4/27/2020	17,437.00
00748567	1011809	PUEBLO COUNTY DEPT OF SOCIAL S	4/27/2020	36.20

1 General Fund

Warrant	Supplier No	Supplier Name	Warrant Date	Amount
00748569	472626	SAFEWARE INC	4/27/2020	833.34
00748571	669061	SCL HEALTH	4/27/2020	1,517.00
00748572	491695	SCYTL	4/27/2020	15,132.00
00748573	255505	SHERMAN & HOWARD LLC	4/27/2020	7,012.50
00748574	643399	SHURTLEFF MECHANICAL	4/27/2020	5,146.00
00748575	1010458	SOTO ANDREA	4/27/2020	750.00
00748576	13932	SOUTH ADAMS WATER & SANITATION	4/27/2020	48.18
00748577	13932	SOUTH ADAMS WATER & SANITATION	4/27/2020	48.18
00748578	13932	SOUTH ADAMS WATER & SANITATION	4/27/2020	429.61
00748579	13932	SOUTH ADAMS WATER & SANITATION	4/27/2020	1,221.71
00748580	51001	SOUTHLAND MEDICAL LLC	4/27/2020	4,283.85
00748581	227044	SOUTHWESTERN PAINTING	4/27/2020	14,145.00
00748582	315130	STANFIELD THOMSON	4/27/2020	65.00
00748583	42818	STATE OF COLORADO	4/27/2020	1.31
00748585	599714	SUMMIT FOOD SERVICE LLC	4/27/2020	42,660.21
00748586	426037	SWIRE COCA-COLA USA	4/27/2020	203.40
00748588	498722	THERMAL & MOISTURE PROTECTION	4/27/2020	2,825.00
00748589	1003446	THK ASSOCIATES INC	4/27/2020	300.00
00748590	1010461	THOMAS CARLA	4/27/2020	150.00
00748591	22538	THOMSON REUTERS - WEST	4/27/2020	390.60
00748592	117701	UNIPATH	4/27/2020	565.00
00748593	1007	UNITED POWER (UNION REA)	4/27/2020	36.04
00748594	1007	UNITED POWER (UNION REA)	4/27/2020	2,714.83
00748595	1007	UNITED POWER (UNION REA)	4/27/2020	22.03
00748596	1007	UNITED POWER (UNION REA)	4/27/2020	51.67
00748597	1007	UNITED POWER (UNION REA)	4/27/2020	775.58
00748616	20730	UNITED STATES POSTAL SERVICE	4/27/2020	1,310.00
00748617	124337	US POSTMASTER	4/27/2020	1,240.00
00748618	227099	VARGO AND JANSON PC	4/27/2020	19.00
00748619	8076	VERIZON WIRELESS	4/27/2020	125.04
00748620	28566	VERIZON WIRELESS	4/27/2020	440.11
00748621	28617	VERIZON WIRELESS	4/27/2020	2,008.45
00748629	790609	VOICE PRODUCTS SERVICE LLC	4/27/2020	4,756.50
00748631	36816	WELLS FARGO BANK	4/27/2020	1,500.00
00748632	544338	WESTAR REAL PROPERTY SERVICES	4/27/2020	13,988.09
00748635	737980	WOLD ARCHITECTS AND ENGINEERS	4/27/2020	10,243.63

1 General Fund

Warrant	Supplier No	Supplier Name	Warrant Date	Amount
00748636	8498	WRIGHT WATER ENGINEERS	4/27/2020	794.00
00748637	338508	WRIGHTWAY INDUSTRIES INC	4/27/2020	158.50
00748638	13822	XCEL ENERGY	4/27/2020	63.53
00748639	13822	XCEL ENERGY	4/27/2020	644.24
			Fund Total	**770,558.85**

4 Capital Facilities Fund

Warrant	Supplier No	Supplier Name	Warrant Date	Amount
00748475	727878	ACKLAM INC	4/27/2020	580.50
00748523	12812	GROUND ENGINEERING CONSULTANTS	4/27/2020	3,508.25
00748548	734988	LYNXWILER ART & DESIGN	4/27/2020	13,500.00
00748550	851909	MC + ENGINEERING LLC	4/27/2020	1,600.00
00748568	248870	ROTH SHEPPARD ARCHITECTS	4/27/2020	10,052.94
			Fund Total	**29,241.69**

6 **Equipment Service Fund**

Warrant	Supplier No	Supplier Name	Warrant Date	Amount
00748533	682207	INSIGHT AUTO GLASS LLC	4/27/2020	321.70
00748570	16237	SAM HILL OIL INC	4/27/2020	19,260.61
			Fund Total	**19,582.31**

13 Road & Bridge Fund

Warrant	Supplier No	Supplier Name	Warrant Date	Amount
00748508	534975	EP&A ENVIROTAC INC	4/27/2020	33,140.36
00748531	4879	IDEAL FENCING CORPORATION	4/27/2020	5,275.00
00748542	40395	KUMAR & ASSOCIATES INC	4/27/2020	215.00
00748556	708348	MOUNTAIN NAVIGATION, INC	4/27/2020	5,580.00
00748598	1007	UNITED POWER (UNION REA)	4/27/2020	127.07
00748599	1007	UNITED POWER (UNION REA)	4/27/2020	126.21
00748600	1007	UNITED POWER (UNION REA)	4/27/2020	39.98
00748601	1007	UNITED POWER (UNION REA)	4/27/2020	114.19
00748602	1007	UNITED POWER (UNION REA)	4/27/2020	136.14
00748603	1007	UNITED POWER (UNION REA)	4/27/2020	20.31
00748604	1007	UNITED POWER (UNION REA)	4/27/2020	48.28
00748605	1007	UNITED POWER (UNION REA)	4/27/2020	48.28
00748606	1007	UNITED POWER (UNION REA)	4/27/2020	16.50
00748607	1007	UNITED POWER (UNION REA)	4/27/2020	16.50
00748608	1007	UNITED POWER (UNION REA)	4/27/2020	36.00
00748609	1007	UNITED POWER (UNION REA)	4/27/2020	34.00
00748610	1007	UNITED POWER (UNION REA)	4/27/2020	33.00
00748611	1007	UNITED POWER (UNION REA)	4/27/2020	88.49
00748612	1007	UNITED POWER (UNION REA)	4/27/2020	33.00
00748613	1007	UNITED POWER (UNION REA)	4/27/2020	23.16
00748614	1007	UNITED POWER (UNION REA)	4/27/2020	16.50
00748630	13082	W L CONTRACTORS INC	4/27/2020	6,295.82
00748640	13822	XCEL ENERGY	4/27/2020	22.92
00748641	13822	XCEL ENERGY	4/27/2020	37.48
00748642	13822	XCEL ENERGY	4/27/2020	97.11
00748643	13822	XCEL ENERGY	4/27/2020	115.22
00748644	13822	XCEL ENERGY	4/27/2020	174.25
00748645	13822	XCEL ENERGY	4/27/2020	4,617.97
00748646	13822	XCEL ENERGY	4/27/2020	25,198.85
00748647	13822	XCEL ENERGY	4/27/2020	81.98
00748648	13822	XCEL ENERGY	4/27/2020	75.54
00748649	13822	XCEL ENERGY	4/27/2020	77.50
			Fund Total	**81,962.61**

19 Insurance Fund

Warrant	Supplier No	Supplier Name	Warrant Date	Amount
00006080	423439	DELTA DENTAL OF COLO	4/30/2020	20,713.80
00006081	523053	TRISTAR RISK MANAGEMENT	4/30/2020	68,734.06
00006082	37223	UNITED HEALTH CARE INSURANCE C	4/30/2020	150,067.04
00006083	37223	UNITED HEALTH CARE INSURANCE C	4/30/2020	57,435.73
00748494	17565	COLO FRAME & SUSPENSION	4/27/2020	2,533.97
00748497	2157	COLO OCCUPATIONAL MEDICINE PHY	4/27/2020	918.00
00748511	346750	FACTORY MOTOR PARTS	4/27/2020	58.48
00748527	1008182	HERMOSILLO JERRY V	4/27/2020	925.00
00748549	226103	MADISON CONSULTING GROUP	4/27/2020	4,999.00
00748587	862222	THE ARTWORKS UNLIMITED LLC	4/27/2020	300.00
00748623	11552	VISION SERVICE PLAN-CONNECTICU	4/27/2020	18,064.27
00748624	11552	VISION SERVICE PLAN-CONNECTICU	4/27/2020	10,505.39
00748625	11552	VISION SERVICE PLAN-CONNECTICU	4/27/2020	186.00
00748626	11552	VISION SERVICE PLAN-CONNECTICU	4/27/2020	647.00
00748627	11552	VISION SERVICE PLAN-CONNECTICU	4/27/2020	769.25
00748628	11552	VISION SERVICE PLAN-CONNECTICU	4/27/2020	2,263.15
			Fund Total	**339,120.14**

27 Open Space Projects Fund

Warrant	Supplier No	Supplier Name	Warrant Date	Amount
00748584	266133	STREAM LANDSCAPE ARCHITECTURE	4/27/2020	4,500.00
			Fund Total	**4,500.00**

31 Head Start Fund

Warrant	Supplier No	Supplier Name	Warrant Date	Amount
00748487	327914	CESCO LINGUISTIC SERVICE INC	4/27/2020	98.69
00748488	166025	CHILDRENS HOSPITAL	4/27/2020	1,125.00
00748498	2157	COLO OCCUPATIONAL MEDICINE PHY	4/27/2020	80.00
00748519	971545	GENESIS FLOOR CARE OF COLORADO	4/27/2020	2,992.50
00748545	40843	LANGUAGE LINE SERVICES	4/27/2020	13.12
00748552	79121	MEADOW GOLD DAIRY	4/27/2020	545.75
00748633	31360	WESTMINSTER PRESBYTERIAN CHURC	4/27/2020	2,222.78
00748634	59983	WESTMINSTER PUBLIC SCHOOLS	4/27/2020	2,812.00
			Fund Total	**9,889.84**

34 Comm Services Blk Grant Fund

Warrant	Supplier No	Supplier Name	Warrant Date	Amount
00748476	258636	ADAMS COUNTY FOOD BANK	4/27/2020	4,972.32
00748510	689894	ETHIOPIAN COMMUNITY DEVELOPMEN	4/27/2020	33.90
00748559	689895	NEW LEGACY CHARTER	4/27/2020	4,041.27
			Fund Total	**9,047.49**

43 Colorado Air & Space Port

Warrant	Supplier No	Supplier Name	Warrant Date	Amount
00006078	771079	COMMERCIAL SPACEFLIGHT FEDERAT	4/30/2020	7,475.00
00748622	80279	VERIZON WIRELESS	4/27/2020	496.49
			Fund Total	**7,971.49**

50 FLATROCK Facility Fund

Warrant	Supplier No	Supplier Name	Warrant Date	Amount
00748486	8973	C & R ELECTRICAL CONTRACTORS I	4/27/2020	5,954.48
00748492	2381	COLO ANALYTICAL LABORATORY	4/27/2020	23.00
00748615	1007	UNITED POWER (UNION REA)	4/27/2020	76.36
			Fund Total	**6,053.84**

Grand Total **1,277,928.26**

3164	Byers/Shamrock Blade Stations	Fund	Voucher	Batch No	GL Date	Amount
	Buildings					
	GROUND ENGINEERING CONSULTANTS	00004	973954	363058	4/22/2020	3,508.25
					Account Total	3,508.25
					Department Total	3,508.25

1074	CA- Risk Management	Fund	Voucher	Batch No	GL Date	Amount
	Safety-Drug & Al Test/Med Cert					
	COLO OCCUPATIONAL MEDICINE PHY	00019	973731	362865	4/19/2020	918.00
					Account Total	918.00
					Department Total	918.00

4	Capital Facilities Fund	Fund	Voucher	Batch No	GL Date	Amount
	Received not Vouchered Clrg					
	ACKLAM INC	00004	974040	363251	4/27/2020	580.50
	LYNXWILER ART & DESIGN	00004	974102	363251	4/27/2020	13,500.00
	MC + ENGINEERING LLC	00004	974039	363251	4/27/2020	1,600.00
	ROTH SHEPPARD ARCHITECTS	00004	974115	363251	4/27/2020	10,052.94
					Account Total	25,733.44
					Department Total	25,733.44

4302	CASP Administration	Fund	Voucher	Batch No	GL Date	Amount
	Telephone					
	VERIZON WIRELESS	00043	974007	363130	4/23/2020	456.48
					Account Total	456.48
					Department Total	456.48

4303	CASP FBO	Fund	Voucher	Batch No	GL Date	Amount
	Telephone					
	VERIZON WIRELESS	00043	974007	363130	4/23/2020	40.01
					Account Total	40.01
					Department Total	40.01

1022	CLK Elections	Fund	Voucher	Batch No	GL Date	Amount
	Postage & Freight					
	US POSTMASTER	00001	973924	363030	4/22/2020	1,240.00
					Account Total	1,240.00
					Department Total	1,240.00

1013	County Attorney	Fund	Voucher	Batch No	GL Date	Amount
	Other Professional Serv					
	INVESTIGATIONS LAW GROUP LLC	00001	973733	362865	4/19/2020	7,962.50
	INVESTIGATIONS LAW GROUP LLC	00001	973734	362865	4/19/2020	28,113.25
	INVESTIGATIONS LAW GROUP LLC	00001	973735	362865	4/19/2020	6,951.25
					Account Total	43,027.00
					Department Total	43,027.00

2031	County Coroner	Fund	Voucher	Batch No	GL Date	Amount
	Medical Services					
	CARUSO JAMES LOUIS	00001	974035	363201	4/24/2020	3,075.00
	CINA & CINA FORENSIC CONSULTIN	00001	974008	363131	4/23/2020	7,000.00
					Account Total	10,075.00
	Operating Supplies					
	ELDORADO ARTESIAN SPRINGS INC	00001	973871	362963	4/21/2020	38.95
	ELDORADO ARTESIAN SPRINGS INC	00001	973872	362963	4/21/2020	11.00
	ELDORADO ARTESIAN SPRINGS INC	00001	973873	362963	4/21/2020	20.97
	SOUTHLAND MEDICAL LLC	00001	973874	362963	4/21/2020	301.53
	SOUTHLAND MEDICAL LLC	00001	973875	362963	4/21/2020	1,605.98
	SOUTHLAND MEDICAL LLC	00001	973877	362963	4/21/2020	2,130.00
	SOUTHLAND MEDICAL LLC	00001	973878	362963	4/21/2020	246.34
					Account Total	4,354.77
	Other Professional Serv					
	COLO OCCUPATIONAL MEDICINE PHY	00001	973883	362963	4/21/2020	150.00
	FEDEX	00001	973869	362963	4/21/2020	65.88
	FEDEX	00001	973870	362963	4/21/2020	47.64
	GENEDX INC	00001	973882	362963	4/21/2020	1,500.00
	LANGUAGE LINE SERVICES	00001	973879	362963	4/21/2020	27.88
	NMS LABS	00001	973886	362963	4/21/2020	18,793.00
	SCL HEALTH	00001	973887	362963	4/21/2020	1,517.00
	THOMSON REUTERS - WEST	00001	973880	362963	4/21/2020	390.60
	UNIPATH	00001	973881	362963	4/21/2020	565.00
					Account Total	23,057.00
	Other Repair & Maint					
	APEX MECHANICAL LLC	00001	973884	362963	4/21/2020	787.84
					Account Total	787.84
					Department Total	38,274.61

1031	County Treasurer	Fund	Voucher	Batch No	GL Date	Amount
	Office Equip Rep & Maint					
	PACIFIC OFFICE AUTOMATION INC	00001	973895	362975	4/21/2020	16.81
					Account Total	16.81
	Other Communications					
	VERIZON WIRELESS	00001	973900	362978	4/21/2020	125.04
					Account Total	125.04
					Department Total	141.85

951016	CSBG	Fund	Voucher	Batch No	GL Date	Amount
	Grants to Other Instit					
	ADAMS COUNTY FOOD BANK	00034	974024	363185	4/24/2020	4,972.32
	ETHIOPIAN COMMUNITY DEVELOPMEN	00034	974023	363185	4/24/2020	33.90
	ETHIOPIAN COMMUNITY DEVELOPMEN	00034	974023	363185	4/29/2020	33.90-
	NEW LEGACY CHARTER	00034	974025	363185	4/24/2020	4,041.27
					Account Total	9,013.59
					Department Total	9,013.59

7041	Economic Development Center	Fund	Voucher	Batch No	GL Date	Amount
	Grants to Other Instit					
	FRONT RANGE COMMUNITY LEARNING	00001	973926	363034	4/22/2020	55,000.00
					Account Total	55,000.00
					Department Total	55,000.00

6	Equipment Service Fund	Fund	Voucher	Batch No	GL Date	Amount
	Received not Vouchered Clrg					
	INSIGHT AUTO GLASS LLC	00006	974094	363251	4/27/2020	321.70
	SAM HILL OIL INC	00006	974116	363251	4/27/2020	4,145.77
	SAM HILL OIL INC	00006	974117	363251	4/27/2020	15,114.84
					Account Total	19,582.31
					Department Total	19,582.31

1076	FO - Adams County Svc Center	Fund	Voucher	Batch No	GL Date	Amount
	Buildings					
	THERMAL & MOISTURE PROTECTION	00001	974033	363195	4/24/2020	2,825.00
					Account Total	2,825.00
	Water/Sewer/Sanitation					
	Energy Cap Bill ID=10615	00001	973909	363026	4/13/2020	1,221.71
					Account Total	1,221.71
					Department Total	4,046.71

1091	FO - Administration	Fund	Voucher	Batch No	GL Date	Amount
	Building Rental					
	BENNETT TOWN OF	00001	974030	363195	4/24/2020	1,500.00
	BENNETT TOWN OF	00001	974031	363195	4/24/2020	1,500.00
	BENNETT TOWN OF	00001	974032	363195	4/24/2020	1,500.00
	IC CHAMBERS LP	00001	974034	363195	4/24/2020	8,071.37
	WESTAR REAL PROPERTY SERVICES	00001	973921	363028	4/22/2020	13,988.09
					Account Total	26,559.46
	Gas & Electricity					
	Energy Cap Bill ID=10619	00001	973910	363026	4/10/2020	137.60
					Account Total	137.60
					Department Total	26,697.06

1060	FO - Community Corrections	Fund	Voucher	Batch No	GL Date	Amount
	Building Repair & Maint					
	ALL PRO AFFORDABLE FENCE LLC	00001	973925	363031	4/22/2020	8,575.00
					Account Total	8,575.00
					Department Total	8,575.00

2090	FO - Flatrock Facility	Fund	Voucher	Batch No	GL Date	Amount
	Building Repair & Maint					
	C & R ELECTRICAL CONTRACTORS I	00050	973922	363028	4/22/2020	5,954.48
	COLO ANALYTICAL LABORATORY	00050	973919	363028	4/22/2020	23.00
					Account Total	5,977.48
	Gas & Electricity					
	Energy Cap Bill ID=10609	00050	973918	363026	4/3/2020	76.36
					Account Total	76.36
					Department Total	6,053.84

1077	FO - Government Center	Fund	Voucher	Batch No	GL Date	Amount
	Building Repair & Maint					
	CUMMINS ROCKY MOUNTAIN	00001	974026	363195	4/24/2020	987.72
					Account Total	987.72
	Repair & Maint Supplies					
	COLO DOORWAYS INC	00001	973923	363028	4/22/2020	303.14
					Account Total	303.14
					Department Total	1,290.86

1070	FO - Honnen/Plan&Devel/MV Ware	Fund	Voucher	Batch No	GL Date	Amount
	Gas & Electricity					
	Energy Cap Bill ID=10602	00001	973901	363026	4/6/2020	376.86
	Energy Cap Bill ID=10604	00001	973902	363026	4/6/2020	333.43
					Account Total	710.29
	Water/Sewer/Sanitation					
	Energy Cap Bill ID=10614	00001	973903	363026	4/13/2020	48.18
	Energy Cap Bill ID=10616	00001	973904	363026	4/13/2020	48.18
	Energy Cap Bill ID=10617	00001	973905	363026	4/13/2020	429.61
					Account Total	525.97
					Department Total	1,236.26

1079	FO - Human Services Center	Fund	Voucher	Batch No	GL Date	Amount
	Other Repair & Maint					
	PARK 12 HUNDRED OWNERS ASSOCIA	00001	974029	363195	4/24/2020	17,437.00
					Account Total	17,437.00
					Department Total	17,437.00

1019	FO - Mailroom & Dock	Fund	Voucher	Batch No	GL Date	Amount
	Postage & Freight					
	UNITED STATES POSTAL SERVICE	00001	974010	363178	4/24/2020	1,310.00
					Account Total	1,310.00
					Department Total	1,310.00

1111	FO - Parks Facilities	Fund	Voucher	Batch No	GL Date	Amount
	Building Repair & Maint					
	SHURTLEFF MECHANICAL	00001	973920	363028	4/22/2020	5,146.00
					Account Total	5,146.00
	Buildings					
	COLO ANALYTICAL LABORATORY	00001	973729	362808	4/17/2020	38.00
					Account Total	38.00
	Gas & Electricity					
	Energy Cap Bill ID=10603	00001	973911	363026	4/6/2020	65.46
	Energy Cap Bill ID=10606	00001	973912	363026	4/3/2020	36.04
	Energy Cap Bill ID=10607	00001	973913	363026	4/3/2020	2,714.83
	Energy Cap Bill ID=10610	00001	973914	363026	4/3/2020	22.03
	Energy Cap Bill ID=10611	00001	973915	363026	4/3/2020	51.67
	Energy Cap Bill ID=10613	00001	973916	363026	4/3/2020	775.58
	Energy Cap Bill ID=10620	00001	973917	363026	4/2/2020	644.24
					Account Total	4,309.85
					Department Total	9,493.85

1075	FO - Strasburg/Whittier	Fund	Voucher	Batch No	GL Date	Amount
	Gas & Electricity					
	Energy Cap Bill ID=10612	00001	973906	363026	4/7/2020	1,707.56
	Energy Cap Bill ID=10618	00001	973907	363026	4/9/2020	642.96
					Account Total	2,350.52
	Water/Sewer/Sanitation					
	Energy Cap Bill ID=10608	00001	973908	363026	4/8/2020	805.30
					Account Total	805.30
					Department Total	3,155.82

1	General Fund	Fund	Voucher	Batch No	GL Date	Amount
	Received not Vouchered Clrg					
	ACE HIGH GLASS INC	00001	974146	363268	4/27/2020	4,000.00
	ADAMSON POLICE PRODUCTS	00001	974118	363251	4/27/2020	103.47
	ADAMSON POLICE PRODUCTS	00001	974119	363251	4/27/2020	81.25
	ADAMSON POLICE PRODUCTS	00001	974124	363251	4/27/2020	98.99
	ADAMSON POLICE PRODUCTS	00001	974127	363251	4/27/2020	48.00
	ADAMSON POLICE PRODUCTS	00001	974128	363251	4/27/2020	234.50
	ADAMSON POLICE PRODUCTS	00001	974129	363251	4/27/2020	896.13
	ADAMSON POLICE PRODUCTS	00001	974130	363251	4/27/2020	158.50
	ADAMSON POLICE PRODUCTS	00001	974131	363251	4/27/2020	110.25
	ADAMSON POLICE PRODUCTS	00001	974132	363251	4/27/2020	322.50
	ADAMSON POLICE PRODUCTS	00001	974133	363251	4/27/2020	30.00
	COHEN MILSTEIN SELLERS & TOLL	00001	974056	363251	4/27/2020	236.25
	COMMERCIAL CLEANING SYSTEMS	00001	974036	363251	4/27/2020	540.00
	CORECIVIC INC	00001	974046	363251	4/27/2020	181,596.60
	DIRSEC	00001	974141	363251	4/27/2020	16,613.81
	DOMINION VOTING SYSTEMS INC	00001	974096	363251	4/27/2020	61,977.45
	DOMINION VOTING SYSTEMS INC	00001	974097	363251	4/27/2020	2,227.68
	FACTORY MOTOR PARTS	00001	974038	363251	4/27/2020	58.48
	FOUND MY KEYS	00001	974121	363251	4/27/2020	1,279.26
	FOUND MY KEYS	00001	974123	363251	4/27/2020	556.20
	GALLS LLC	00001	974070	363251	4/27/2020	297.89
	GALLS LLC	00001	974071	363251	4/27/2020	53.30
	GALLS LLC	00001	974072	363251	4/27/2020	143.80
	GALLS LLC	00001	974073	363251	4/27/2020	1,708.20
	GALLS LLC	00001	974074	363251	4/27/2020	50.42
	GALLS LLC	00001	974075	363251	4/27/2020	35.95
	GALLS LLC	00001	974076	363251	4/27/2020	58.95
	GALLS LLC	00001	974077	363251	4/27/2020	131.29
	GALLS LLC	00001	974078	363251	4/27/2020	142.86
	GALLS LLC	00001	974079	363251	4/27/2020	379.91
	GALLS LLC	00001	974080	363251	4/27/2020	252.29
	GALLS LLC	00001	974081	363251	4/27/2020	106.59
	GALLS LLC	00001	974082	363251	4/27/2020	811.84
	GALLS LLC	00001	974083	363251	4/27/2020	208.30
	GALLS LLC	00001	974084	363251	4/27/2020	152.89

1	General Fund	Fund	Voucher	Batch No	GL Date	Amount
	GALLS LLC	00001	974085	363251	4/27/2020	151.26
	GALLS LLC	00001	974086	363251	4/27/2020	120.00
	GALLS LLC	00001	974087	363251	4/27/2020	174.51
	GALLS LLC	00001	974088	363251	4/27/2020	122.34
	GALLS LLC	00001	974089	363251	4/27/2020	109.75
	GALLS LLC	00001	974090	363251	4/27/2020	191.72
	GALLS LLC	00001	974091	363251	4/27/2020	103.00
	GALLS LLC	00001	974092	363251	4/27/2020	133.85
	GALLS LLC	00001	974093	363251	4/27/2020	294.72
	GALLS LLC	00001	974093	363251	4/27/2020	403.87
	GAM ENTERPRISES INC	00001	974101	363251	4/27/2020	379.02
	GOVERNOR'S OFFICE OF IT	00001	974100	363251	4/27/2020	2,237.22
	HILL'S PET NUTRITION SALES INC	00001	974112	363251	4/27/2020	1,889.00
	IDEXX DISTRIBUTION INC	00001	974060	363251	4/27/2020	559.41
	INTERVENTION COMMUNITY CORRECT	00001	974048	363251	4/27/2020	1,234.46
	INTERVENTION COMMUNITY CORRECT	00001	974048	363251	4/27/2020	170.61
	INTERVENTION COMMUNITY CORRECT	00001	974049	363251	4/27/2020	105.40
	J. BROWER PSYCHOLOGICAL SERVIC	00001	974120	363251	4/27/2020	1,900.00
	K&H INTEGRATED PRINT SOLUTIONS	00001	974147	363268	4/27/2020	6,110.37
	LAMAR COMPANIES	00001	974069	363251	4/27/2020	900.00
	LEXIS NEXIS MATTHEW BENDER	00001	974138	363251	4/27/2020	2,180.99
	MCCLURE HILL INC	00001	974099	363251	4/27/2020	59,600.00
	MWI VETERINARY SUPPLY CO	00001	974061	363251	4/27/2020	258.06
	MWI VETERINARY SUPPLY CO	00001	974059	363251	4/27/2020	17.60
	ONENECK IT SOLUTIONS LLC	00001	974142	363251	4/27/2020	115.00
	ONENECK IT SOLUTIONS LLC	00001	974143	363251	4/27/2020	697.50
	ONENECK IT SOLUTIONS LLC	00001	974144	363251	4/27/2020	14,469.30
	ONENECK IT SOLUTIONS LLC	00001	974144	363251	4/27/2020	14,469.30
	ONENECK IT SOLUTIONS LLC	00001	974144	363251	4/27/2020	14,469.30
	ORACLE AMERICA INC	00001	974140	363251	4/27/2020	42,048.21
	SAFEWARE INC	00001	974139	363251	4/27/2020	833.34
	SCYTL	00001	974095	363251	4/27/2020	15,132.00
	SHERMAN & HOWARD LLC	00001	974057	363251	4/27/2020	7,012.50
	SOUTHWESTERN PAINTING	00001	974067	363251	4/27/2020	11,846.00
	SOUTHWESTERN PAINTING	00001	974067	363251	4/27/2020	2,299.00
	STATE OF COLORADO	00001	974044	363251	4/27/2020	1.31

1	General Fund	Fund	Voucher	Batch No	GL Date	Amount
	SUMMIT FOOD SERVICE LLC	00001	974134	363251	4/27/2020	19,004.86
	SUMMIT FOOD SERVICE LLC	00001	974135	363251	4/27/2020	3,482.22
	SUMMIT FOOD SERVICE LLC	00001	974136	363251	4/27/2020	16,744.22
	SUMMIT FOOD SERVICE LLC	00001	974137	363251	4/27/2020	3,112.61
	SWIRE COCA-COLA USA	00001	974068	363251	4/27/2020	203.40
	THK ASSOCIATES INC	00001	974105	363251	4/27/2020	300.00
	WOLD ARCHITECTS AND ENGINEERS	00001	974037	363251	4/27/2020	10,243.60
	WRIGHT WATER ENGINEERS	00001	974041	363251	4/27/2020	794.00
	WRIGHTWAY INDUSTRIES INC	00001	974111	363251	4/27/2020	158.50
					Account Total	532,487.13
					Department Total	532,487.13

9252	GF- Admin/Org Support	Fund	Voucher	Batch No	GL Date	Amount
	Building Repair & Maint					
	COMMERCIAL CLEANING SYSTEMS	00001	974027	363195	4/24/2020	350.00
	COMMERCIAL CLEANING SYSTEMS	00001	974028	363195	4/24/2020	4,400.00
					Account Total	4,750.00
	Trustee Fees					
	WELLS FARGO BANK	00001	973860	362892	4/20/2020	1,500.00
					Account Total	1,500.00
					Department Total	6,250.00

31	Head Start Fund	Fund	Voucher	Batch No	GL Date	Amount
	Received not Vouchered Clrg					
	CESCO LINGUISTIC SERVICE INC	00031	974045	363251	4/27/2020	98.69
	CHILDRENS HOSPITAL	00031	974058	363251	4/27/2020	1,125.00
	GENESIS FLOOR CARE OF COLORADO	00031	974113	363251	4/27/2020	1,995.00
	GENESIS FLOOR CARE OF COLORADO	00031	974114	363251	4/27/2020	997.50
	MEADOW GOLD DAIRY	00031	974148	363268	4/27/2020	88.50
	MEADOW GOLD DAIRY	00031	974062	363251	4/27/2020	88.50
	MEADOW GOLD DAIRY	00031	974063	363251	4/27/2020	44.25
	MEADOW GOLD DAIRY	00031	974064	363251	4/27/2020	59.00
	MEADOW GOLD DAIRY	00031	974065	363251	4/27/2020	44.25
	MEADOW GOLD DAIRY	00031	974066	363251	4/27/2020	118.00
	MEADOW GOLD DAIRY	00031	974108	363251	4/27/2020	44.25
	MEADOW GOLD DAIRY	00031	974109	363251	4/27/2020	59.00
					Account Total	4,761.94
					Department Total	4,761.94

935120	HHS Grant	Fund	Voucher	Batch No	GL Date	Amount
	Building Rental					
	WESTMINSTER PRESBYTERIAN CHURC	00031	973855	362885	4/20/2020	2,222.78
	WESTMINSTER PUBLIC SCHOOLS	00031	973856	362885	4/20/2020	2,812.00
					Account Total	5,034.78
	Interpreting Services					
	LANGUAGE LINE SERVICES	00031	973928	362885	4/20/2020	6.56
	LANGUAGE LINE SERVICES	00031	973854	362885	4/20/2020	6.56
					Account Total	13.12
	Medical Services					
	COLO OCCUPATIONAL MEDICINE PHY	00031	973853	362885	4/20/2020	80.00
					Account Total	80.00
					Department Total	5,127.90

8613	Insurance - UHC EPO Medical	Fund	Voucher	Batch No	GL Date	Amount
	Claims					
	UNITED HEALTH CARE INSURANCE C	00019	972994	361777	4/1/2020	150,067.04
	UNITED HEALTH CARE INSURANCE C	00019	974346	363410	4/29/2020	57,435.73
					Account Total	207,502.77
					Department Total	207,502.77

8614	Insurance- Delta Dental	Fund	Voucher	Batch No	GL Date	Amount
	Self-Insurance Claims					
	DELTA DENTAL OF COLO	00019	973012	361836	4/2/2020	12,884.80
	DELTA DENTAL OF COLO	00019	973013	361836	4/2/2020	7,829.00
					Account Total	20,713.80
					Department Total	20,713.80

19	Insurance Fund	Fund	Voucher	Batch No	GL Date	Amount
	Received not Vouchered Clrg					
	COLO FRAME & SUSPENSION	00019	974055	363251	4/27/2020	2,533.97
					Account Total	2,533.97
					Department Total	2,533.97

8611	Insurance- Property/Casualty	Fund	Voucher	Batch No	GL Date	Amount
	Auto Physical Damage					
	HERMOSILLO JERRY V	00019	973730	362864	4/19/2020	925.00
	THE ARTWORKS UNLIMITED LLC	00019	973732	362865	4/19/2020	300.00
					Account Total	1,225.00
	Other Professional Serv					
	MADISON CONSULTING GROUP	00019	973859	362890	4/20/2020	2,499.00
					Account Total	2,499.00
					Department Total	3,724.00

8623	Insurance- Vision	Fund	Voucher	Batch No	GL Date	Amount
	Self-Insurance Claims					
	VISION SERVICE PLAN-CONNECTICU	00019	973963	363064	4/22/2020	18,064.27
	VISION SERVICE PLAN-CONNECTICU	00019	973964	363064	4/22/2020	10,505.39
	VISION SERVICE PLAN-CONNECTICU	00019	973965	363064	4/22/2020	186.00
	VISION SERVICE PLAN-CONNECTICU	00019	973966	363064	4/22/2020	647.00
					Account Total	29,402.66
					Department Total	29,402.66

8617	Insurance- Workers Comp	Fund	Voucher	Batch No	GL Date	Amount
	Other Professional Serv					
	MADISON CONSULTING GROUP	00019	973859	362890	4/20/2020	2,500.00
					Account Total	2,500.00
	Workers Compensation					
	TRISTAR RISK MANAGEMENT	00019	974335	363402	4/29/2020	68,734.06
					Account Total	68,734.06
					Department Total	71,234.06

27	Open Space Projects Fund	Fund	Voucher	Batch No	GL Date	Amount
	Received not Vouchered Clrg					
	STREAM LANDSCAPE ARCHITECTURE	00027	974050	363251	4/27/2020	4,500.00
					Account Total	4,500.00
					Department Total	4,500.00

1015	People Services	Fund	Voucher	Batch No	GL Date	Amount
	Tuition Reimbursement					
	CORNELL NICHOLAS	00001	973972	363068	4/23/2020	964.49
					Account Total	964.49
					Department Total	964.49

2061	PKS - Weed & Pest	Fund	Voucher	Batch No	GL Date	Amount
	Other Communications					
	VERIZON WIRELESS	00001	973861	362959	4/21/2020	80.02
					Account Total	80.02
	Other Professional Serv					
	AGTERRA TECHNOLOGIES INC	00001	973863	362960	4/21/2020	105.00
					Account Total	105.00
					Department Total	185.02

5010	PKS- Fair	Fund	Voucher	Batch No	GL Date	Amount
	Event Services					
	AIRGAS USA LLC	00001	973864	362960	4/21/2020	111.95
					Account Total	111.95
	Other Communications					
	VERIZON WIRELESS	00001	973862	362959	4/21/2020	360.09
					Account Total	360.09
	Regional Park Concessions					
	KLEIN TIM	00001	973738	362869	4/20/2020	150.00
					Account Total	150.00
	Regional Park Rentals					
	KLEIN TIM	00001	973736	362869	4/20/2020	1,115.00
	LEE JR MICHAEL	00001	973739	362869	4/20/2020	1,300.00
	MENDOZA AUTUMN	00001	973740	362869	4/20/2020	150.00
	SOTO ANDREA	00001	973741	362869	4/20/2020	750.00
	THOMAS CARLA	00001	973742	362869	4/20/2020	150.00
					Account Total	3,465.00
	Sheriff Park Security Fees					
	KLEIN TIM	00001	973737	362869	4/20/2020	564.00
					Account Total	564.00
	Software and Licensing					
	NEON RAIN INTERACTIVE LLC	00001	973893	362972	4/21/2020	97.50
					Account Total	97.50
					Department Total	4,748.54

5015	PKS- Grounds Maintenance	Fund	Voucher	Batch No	GL Date	Amount
	Operating Supplies					
	NORTHGLENN CITY OF	00001	973866	362960	4/21/2020	56.00
					Account Total	56.00
					Department Total	56.00

5012	PKS- Regional Complex	Fund	Voucher	Batch No	GL Date	Amount
	Other Repair & Maint					
	HONNEN EQUIPMENT	00001	973865	362960	4/21/2020	124.53
					Account Total	124.53
					Department Total	124.53

5016	PKS- Trail Ranger Patrol	Fund	Voucher	Batch No	GL Date	Amount
	Gas & Electricity					
	XCEL ENERGY	00001	973867	362960	4/21/2020	63.53
					Account Total	63.53
					Department Total	63.53

1089	PLN- Boards & Commissions	Fund	Voucher	Batch No	GL Date	Amount
	Other Professional Serv					
	BUSH MELVIN E	00001	973768	362874	4/20/2020	65.00
	GREEN THOMAS D	00001	973767	362874	4/20/2020	65.00
	GRONQUIST CHRIS	00001	973769	362874	4/20/2020	65.00
	HANCOCK FORREST HAYES	00001	973761	362874	4/20/2020	65.00
	HARNETT OWEN	00001	973764	362874	4/20/2020	65.00
	NYHOLM STEWART E	00001	973766	362874	4/20/2020	65.00
	STANFIELD THOMSON	00001	973763	362874	4/20/2020	65.00
					Account Total	455.00
					Department Total	455.00

3031	PW - Operations & Maintenance	Fund	Voucher	Batch No	GL Date	Amount
	Gas & Electricity					
	UNITED POWER (UNION REA)	00013	973982	363118	4/23/2020	127.07
	UNITED POWER (UNION REA)	00013	973983	363118	4/23/2020	126.21
	UNITED POWER (UNION REA)	00013	973984	363118	4/23/2020	39.98
	UNITED POWER (UNION REA)	00013	973985	363118	4/23/2020	114.19
	UNITED POWER (UNION REA)	00013	973986	363118	4/23/2020	136.14
	UNITED POWER (UNION REA)	00013	973987	363118	4/23/2020	20.31
	UNITED POWER (UNION REA)	00013	973988	363118	4/23/2020	48.28
	UNITED POWER (UNION REA)	00013	973989	363118	4/23/2020	48.28
	UNITED POWER (UNION REA)	00013	973990	363118	4/23/2020	16.50
	UNITED POWER (UNION REA)	00013	973991	363118	4/23/2020	16.50
	UNITED POWER (UNION REA)	00013	973992	363118	4/23/2020	36.00
	UNITED POWER (UNION REA)	00013	973993	363118	4/23/2020	34.00
	UNITED POWER (UNION REA)	00013	973994	363118	4/23/2020	33.00
	UNITED POWER (UNION REA)	00013	973995	363118	4/23/2020	88.49
	UNITED POWER (UNION REA)	00013	973996	363118	4/23/2020	33.00
	UNITED POWER (UNION REA)	00013	973997	363118	4/23/2020	23.16
	UNITED POWER (UNION REA)	00013	973998	363118	4/23/2020	16.50
	XCEL ENERGY	00013	973973	363118	4/23/2020	37.48
	XCEL ENERGY	00013	973974	363118	4/23/2020	97.11
	XCEL ENERGY	00013	973975	363118	4/23/2020	115.22
	XCEL ENERGY	00013	973976	363118	4/23/2020	174.25
	XCEL ENERGY	00013	973977	363118	4/23/2020	4,617.97
	XCEL ENERGY	00013	973978	363118	4/23/2020	25,198.85
	XCEL ENERGY	00013	973979	363118	4/23/2020	81.98
	XCEL ENERGY	00013	973980	363118	4/23/2020	75.54
	XCEL ENERGY	00013	973981	363118	4/23/2020	77.50
					Account Total	31,433.51
					Department Total	31,433.51

3055	PW - Streets Program	Fund	Voucher	Batch No	GL Date	Amount
	Gas & Electricity					
	XCEL ENERGY	00013	973885	362965	4/21/2020	22.92
					Account Total	22.92
					Department Total	22.92

8624	Retiree-Vision	Fund	Voucher	Batch No	GL Date	Amount
	Self-Insurance Claims					
	VISION SERVICE PLAN-CONNECTICU	00019	973967	363064	4/22/2020	769.25
	VISION SERVICE PLAN-CONNECTICU	00019	973968	363064	4/22/2020	2,263.15
					Account Total	3,032.40
					Department Total	3,032.40

13	Road & Bridge Fund	Fund	Voucher	Batch No	GL Date	Amount
	Received not Vouchered Clrg					
	EP&A ENVIROTAC INC	00013	974103	363251	4/27/2020	16,570.18
	EP&A ENVIROTAC INC	00013	974104	363251	4/27/2020	16,570.18
	IDEAL FENCING CORPORATION	00013	974110	363251	4/27/2020	5,275.00
	KUMAR & ASSOCIATES INC	00013	974052	363251	4/27/2020	215.00
	MOUNTAIN NAVIGATION, INC	00013	974053	363251	4/27/2020	744.00
	MOUNTAIN NAVIGATION, INC	00013	974053	363251	4/27/2020	1,206.00
	MOUNTAIN NAVIGATION, INC	00013	974054	363251	4/27/2020	3,630.00
	W L CONTRACTORS INC	00013	974047	363251	4/27/2020	6,295.82
					Account Total	50,506.18
					Department Total	50,506.18

2070	SHF - Booking Fee	Fund	Voucher	Batch No	GL Date	Amount
	Operating Supplies					
	COMMUNITY REACH CENTER	00001	973956	363063	4/22/2020	22.94
					Account Total	22.94
					Department Total	22.94

2011	SHF- Admin Services Division	Fund	Voucher	Batch No	GL Date	Amount
	Minor Equipment					
	VOICE PRODUCTS SERVICE LLC	00001	973962	363063	4/22/2020	4,756.50
					Account Total	4,756.50
	Operating Supplies					
	CRESTLINE MEDICAL SUPPLY	00001	974009	363177	4/24/2020	1,540.00
	ERGOMETRICS & APPLIED PERSONNE	00001	973957	363063	4/22/2020	880.55
					Account Total	2,420.55
					Department Total	7,177.05

2015	SHF- Civil Section	Fund	Voucher	Batch No	GL Date	Amount
	Sheriff's Fees					
	FRANCY LAW FIRM	00001	973890	362966	4/21/2020	15.00
	HATCH RAY OLSEN SANDBERG	00001	973891	362966	4/21/2020	42.00
	MIDLAND CREDIT MANAGEMENT INC	00001	973889	362966	4/21/2020	19.00
	PUEBLO COUNTY DEPT OF SOCIAL S	00001	973892	362966	4/21/2020	36.20
	VARGO AND JANSON PC	00001	973888	362966	4/21/2020	19.00
					Account Total	131.20
					Department Total	131.20

2075	SHF- Commissary Fund	Fund	Voucher	Batch No	GL Date	Amount
	Other Professional Serv					
	METRO TRANSPORTATION PLANNING	00001	973959	363063	4/22/2020	3,701.10
					Account Total	3,701.10
					Department Total	3,701.10

2016	SHF- Detective Division	Fund	Voucher	Batch No	GL Date	Amount
	Other Communications					
	VERIZON WIRELESS	00001	973961	363063	4/22/2020	2,008.45
					Account Total	2,008.45
					Department Total	2,008.45

2071	SHF- Detention Facility	Fund	Voucher	Batch No	GL Date	Amount
	Buildings					
	WOLD ARCHITECTS AND ENGINEERS	00001	974037	363251	4/27/2020	.03
					Account Total	.03
	Operating Supplies					
	SUMMIT FOOD SERVICE LLC	00001	973960	363063	4/22/2020	316.30
					Account Total	316.30
					Department Total	316.33

2017	SHF- Patrol Division	Fund	Voucher	Batch No	GL Date	Amount
	Minor Equipment					
	JTC COMMUNICATIONS LLC	00001	973958	363063	4/22/2020	1,000.00
					Account Total	1,000.00
					Department Total	1,000.00

4315	Space Port	Fund	Voucher	Batch No	GL Date	Amount
	Membership Dues					
	COMMERCIAL SPACEFLIGHT FEDERAT	00043	973671	362691	4/15/2020	7,475.00
					Account Total	7,475.00
					Department Total	7,475.00

Grand Total	**1,277,894.36**

Board of County Commissioners
Minutes of Commissioners' Proceedings

Eva J. Henry - District #1
Charles "Chaz" Tedesco - District #2
Emma Pinter - District #3
Steve O'Dorisio - District #4
Mary Hodge - District #5

Tuesday
May 12, 2020
9:30 AM

Watch the virutal meeting through our You Tube Channel
http://www.adcogov.org/events/bocc-public-hearing-9

1. ROLL CALL

Present: 5 - Commissioner Henry, Commissioner Tedesco, Commissioner Pinter, Commissioner O'Dorisio, and Commissioner Hodge

2. PLEDGE OF ALLEGIANCE

3. MOTION TO APPROVE AGENDA

A motion was made by Commissioner Henry, seconded by Commissioner Tedesco, that this Agenda be approved. The motion carried by the following vote:

Aye: 5 - Commissioner Henry, Commissioner Tedesco, Commissioner Pinter, Commissioner O'Dorisio, and Commissioner Hodge

4. AWARDS AND PRESENTATIONS

A. Proclamation of May 2020 as Foster Care Month

5. PUBLIC COMMENT

A. Citizen Communication

Members of the public may submit written comments on any matter within the Board's subject matter jurisdiction or request to speak at the meeting through our eComment system at https://adcogov.legistar.com/Calendar.aspx

Residents are encouraged to submit comments, prior to the meeting, through written comment using eComment; eComment is integrated with the published meeting agenda and individuals may review the agenda item details and indicate their position on each item. A request to speak at the meeting may also be submitted using the eComment feature. You will be prompted to set up a user profile to allow you to comment, which will become part of the official public record. The eComment period opens when the agenda is published and closes at 4:30 p.m. the Monday prior to the noticed meeting.

B. Elected Officials' Communication

6. CONSENT CALENDAR

A motion was made by Commissioner O'Dorisio, seconded by Commissioner Hodge, that this Consent Calendar be approved. The motion carried by the following vote:

Aye: 5 - Commissioner Henry, Commissioner Tedesco, Commissioner Pinter, Commissioner O'Dorisio, and Commissioner Hodge

A. List of Expenditures Under the Dates of March 16-20, 2020

B. List of Expenditures Under the Dates of March 30 - April 3, 2020

C. List of Expenditures Under the Dates of April 6-10, 2020

D. List of Expenditures Under the Dates of April 13-17, 2020

E. List of Expenditures Under the Dates of April 20-24, 2020

F. Minutes of the Commissioners' Proceedings from May 5, 2020

G. Adams County Public Trustee Operational Expense for the Quarter Ending March 2020

H. Resolution Accepting a Permanent Drainage Easement from Gary James Cooper and Patricia Doreen Cooper to Adams County for Drainage Improvements
(File approved by ELT)

I. Resolution Accepting a Warranty Deed Conveying Property from Gary James Cooper and Patricia Doreen Cooper to Adams County for Right-of-Way for West 68th Avenue
(File approved by ELT)

J. Resolution Accepting Warranty Deeds Conveying Property to Adams County for Public Right-of-Way Purposes
(File approved by ELT)

K. Resolution Accepting a Warranty Deed Conveying Property from Charles Turner, Jr. to Adams County for Right-of-Way for West 64th Avenue and Schumaker Mile Road
(File approved by ELT)

L. Resolution Accepting a Warranty Deed Conveying Property from Rosemary A. Borders and Gary D. Graves to Adams County for Right-of-Way for Powhaton Mile Road
(File approved by ELT)

M. Resolution Accepting a Warranty Deed Conveying Property from Helzer Farms Inc. to Adams County for Right-of-Way for Pass Me By Mile Road
(File approved by ELT)

N. Resolution Accepting a Warranty Deed Conveying Property from DeWayne K. Hansen to Adams County for Right-of-Way for Hudson Mile Road
(File approved by ELT)

O. Resolution Accepting a Warranty Deed Conveying Property from Katheryn Louise Eads to Adams County for Right-of-Way Purposes
(File approved by ELT)

P. Resolution Accepting a Warranty Deed Conveying Property from Gerald Adame and Phyllis Thorpe to Adams County for Right-of-Way for East 120th Avenue and Quail Run Mile Road
(File approved by ELT)

Q. Resolution Accepting a Warranty Deed Conveying Property from Alvin W. Swink to Adams County for Right-of-Way for Harvest Mile Road
(File approved by ELT)

R. Resolution Approving Quitclaim Deed from Adams County to B&M Equipment Company, LLP, for the Transfer of Property Necessary for the Dahlia Storm Drain Outfall Project
(File approved by ELT)

S. Resolution Approving Right-of-Way Agreement between Adams County and Simon Guerrero, for Property Necessary for the East 58th Avenue Improvements Project – East 58th Avenue from Clarkson Street to York Street
(File approved by ELT)

T. Resolution Approving Right-of-Way Agreement between Adams County and Maria Torres and Victor Manuel Escobar Torres, for Property Necessary for the 2018 Miscellaneous Concrete and ADA Ramps Project
(File approved by ELT)

U. Resolution Approving Right-of-Way Agreement between Adams County and Arthur R Hoenighausen and Patricia N Hoenighausen for Property Necessary for the 2019 Miscellaneous Concrete and ADA Ramps Project
(File approved by ELT)

V. Resolution Approving Right-of-Way Agreement between Adams County and Khoi Tran for Property Necessary for the 2019 Miscellaneous Concrete and ADA Ramps Project
(File approved by ELT)

W. Resolution Approving Ditch Modification Agreement between Agnes L. Domenico and Gregory L. Domenico, and Adams County, for Relocation of a Ditch Lateral Necessary for the York Street Improvements Project - York Street from East 78th Avenue to Highway 224
(File approved by ELT)

X. Resolution Approving Right-of-Way Agreement between Adams County, and Agnes L. Domenico and Gregory L. Domenico for Property Necessary for the York Street Improvements Project - York Street from East 78th Avenue to Highway 224
(File approved by ELT)

Y. Resolution Approving Amendment of Easement to United Power for Power Service at the Riverdale Regional Park
(File approved by ELT)

Z. Resolution Approving the First Amendment to Purchase and Sale Agreement between Adams County and the City of Commerce City for 7111 East 56th Avenue
(File approved by ELT)

AA. Resolution Approving Substantial Amendment to the 2019 Annual Action Plan for Tenant Based Rental Assistance Program
(File approved by ELT)

7. NEW BUSINESS

A. COUNTY MANAGER

1. Resolution Authorizing Second Supplemental Appropriations to the 2020 Adams County Government Budget
(File approved by ELT)
A motion was made by Commissioner O'Dorisio, seconded by Commissioner Tedesco, that this New Business be approved. The motion carried by the following vote:

Aye: 5 - Commissioner Henry, Commissioner Tedesco, Commissioner Pinter, Commissioner O'Dorisio, and Commissioner Hodge

2. Resolution Approving Change Order Four to the Agreement between Adams County and Jalisco International Inc., for Lowell to Clear Creek Avenue Project
(File approved by ELT)
A motion was made by Commissioner Henry, seconded by Commissioner Hodge, that this New Business be approved. The motion carried by the following vote:

Aye: 5 - Commissioner Henry, Commissioner Tedesco, Commissioner Pinter, Commissioner O'Dorisio, and Commissioner Hodge

3. Resolution Approving Amendment Three to the Agreement between Adams County and Commercial Cleaning Systems for Custodial Services
(File approved by ELT)
A motion was made by Commissioner Hodge, seconded by Commissioner O'Dorisio, that this New Business be approved. The motion carried by the following vote:

Aye: 5 - Commissioner Henry, Commissioner Tedesco, Commissioner Pinter, Commissioner O'Dorisio, and Commissioner Hodge

4. Resolution Approving Change Order Three to the Agreement between Adams County and Icon Engineering Inc., for the Dahlia Street Drainage Improvement Project
(File approved by ELT)
A motion was made by Commissioner Henry, seconded by Commissioner Hodge, that this New Business be approved. The motion carried by the following vote:

Aye: 5 - Commissioner Henry, Commissioner Tedesco, Commissioner Pinter, Commissioner O'Dorisio, and Commissioner Hodge

5. Resolution Approving Change Order Two to the Agreement between Adams County and Mountain Constructors Inc., for the 96th Avenue Bijou Creek Bridge Rehabilitation Project
(File approved by ELT)
A motion was made by Commissioner O'Dorisio, seconded by Commissioner Hodge, that this New Business be approved. The motion carried by the following vote:

Aye: 5 - Commissioner Henry, Commissioner Tedesco, Commissioner Pinter, Commissioner O'Dorisio, and Commissioner Hodge

B. COUNTY ATTORNEY

8. LAND USE HEARINGS

A. Cases to be Heard

1. PLN2020-00002 Chapter 4 Text Amendments - Marijuana Hospitality
(File approved by ELT)
A motion was made by Commissioner O'Dorisio, seconded by Commissioner Hodge, that this Land Use Hearing be denied. The motion carried by the following vote:

Aye: 5 - Commissioner Henry, Commissioner Tedesco, Commissioner Pinter, Commissioner O'Dorisio, and Commissioner Hodge

Motion to Adjourn into Executive Session Pursuant to C.R.S. 24-6-402 4(b) for the Purpose of Receiving Legal Advice
A motion was made by Commissioner O'Dorisio, seconded by Commissioner Henry, that this Executive Session be approved. The motion carried by the following vote:

Aye: 5 - Commissioner Henry, Commissioner Tedesco, Commissioner Pinter, Commissioner O'Dorisio, and Commissioner Hodge

2. RCU2019-00044 T&G 73rd Avenue Rezone
(File approved by ELT)
A motion was made by Commissioner O'Dorisio, seconded by Commissioner Tedesco, that this Land Use Hearing be approved. The motion carried by the following vote:

Aye: 5 - Commissioner Henry, Commissioner Tedesco, Commissioner Pinter, Commissioner O'Dorisio, and Commissioner Hodge

9. ADJOURNMENT

AND SUCH OTHER MATTERS OF PUBLIC BUSINESS WHICH MAY ARISE

PUBLIC HEARING AGENDA ITEM

DATE OF PUBLIC HEARING: May 19, 2020
SUBJECT: Intergovernmental Agreement between the City of Federal Heights and Adams County Regarding the Traffic Signal, ADA Curb Ramps Reconstruction and Resurfacing of 84th Ave and Pecos St. Intersection
FROM: Kristin Sullivan, AICP, Director of Public Works
AGENCY/DEPARTMENT: Public Works
HEARD AT STUDY SESSION ON: February 11, 2020
AUTHORIZATION TO MOVE FORWARD: ☒ **YES** ☐ **NO**
RECOMMENDED ACTION: That the Board of County Commissioners approve an IGA with the City of Federal Heights for the reconstruction of the traffic signal, ADA curb ramps and resurfacing of 84th Avenue and Pecos Intersection.

BACKGROUND:

Adams County and the City of Federal Heights, a Colorado home rule municipality, desire to enter into an intergovernmental agreement regarding the reconstruction of the traffic signal, ADA curb ramps and resurfacing of 84th Avenue and Pecos Intersection. The County will be resurfacing 84th Avenue from Zuni Street to Greenwood Boulevard with the County's 2020 Street Paving Program and portions are within the City's jurisdiction. The City has agreed to reimburse the County for the portion of work within the City's jurisdiction. The agreement outlines the responsibilities of both the City and Adams County regarding the project and associated costs. The City has approved and signed the agreement.

AGENCIES, DEPARTMENTS OR OTHER OFFICES INVOLVED:

Adams County Public Works Department
City of Federal Heights

ATTACHED DOCUMENTS:

Agreement
Resolution

FISCAL IMPACT:

Please check if there is no fiscal impact ☐. If there is fiscal impact, please fully complete the section below.

Fund: 00013

Cost Center: 3055

	Object Account	Subledger	Amount
Current Budgeted Revenue:			
Additional Revenue not included in Current Budget:	7820		240,538.49
Total Revenues:			

	Object Account	Subledger	Amount
Current Budgeted Operating Expenditure:			
Add'l Operating Expenditure not included in Current Budget:			
Current Budgeted Capital Expenditure:			
Add'l Capital Expenditure not included in Current Budget:			
Total Expenditures:			

New FTEs requested: ☐ **YES** ☒ **NO**

Future Amendment Needed: ☐ **YES** ☒ **NO**

Additional Note:

BOARD OF COUNTY COMMISSIONERS FOR
ADAMS COUNTY, STATE OF COLORADO

RESOLUTION APPROVING AN INTERGOVERNMENTAL AGREEMENT BETWEEN ADAMS COUNTY AND THE CITY OF FEDERAL HEIGHTS REGARDING DESIGN AND RECONSTRUCTION OF TRAFFIC SIGNAL, ADA CURB RAMPS, AND RESURFACING W. 84TH AVENUE AND PECOS STREET INTERSECTION

WHEREAS, Adams County ("County") and the City of Federal Heights ("City"), (collectively the "Parties"), have entered into an "Agreement Regarding Design and Reconstruction of Traffic Signal, ADA Curb Ramps, and Resurfacing W. 84th Avenue and Pecos Street (the "Project"); and,

WHEREAS, Parties now desire to proceed with the Project; and,

WHEREAS, portions of the Project are within the City's jurisdiction; and,

WHEREAS, the City has agreed to reimburse the County for the portion of work within the City's jurisdiction; and,

WHEREAS, the responsibilities and costs are defined as outlined in the Agreement; and,

WHEREAS, the City of Federal Heights has approved and signed the Agreement.

NOW, THEREFORE, BE IT RESOLVED, by the Board of County Commissioners, County of Adams, State of Colorado, that the Intergovernmental Agreement between Adams County and the City Federal Heights Regarding Design and Reconstruction of Traffic Signal, ADA Curb Ramps and Resurfacing W. 84th Avenue and Pecos Street, two copies of which are attached hereto and incorporated herein by this reference, be and hereby is approved.

BE IT FURTHER RESOLVED, that the Chair is authorized to execute said Agreement on behalf of Adams County.

INTERGOVERNMENTAL AGREEMENT
BETWEEN ADAMS COUNTY, COLORADO AND CITY OF FEDERAL HEIGHTS REGARDING DESIGN FOR INTERSECTION IMPROVEMENTS, RESURFACING AND TRAFFIC SIGNAL RECONSTRUCTION AT WEST 84TH AVENUE AND PECOS STREET

This INTERGOVERNMENTAL AGREEMENT (the "IGA") is made and entered into effective this _____day of _____, 2020, by and between the County of Adams, Colorado ("County"), and the City of Federal Heights ("City"). Both the City and the County are referred to herein as either the singular "Party" or the plural "Parties."

WHEREAS, pursuant to Art. XIV, § 1 8(2)(a) of the Colorado Constitution, and § 29-1-203, C.R.S., as amended, the Parties may cooperate or contract with each other to provide any function or service lawfully authorized to each; and

WHEREAS, the intersection of West 84th Avenue and Pecos Street (the "84th Avenue Intersection") is jointly situated within the corporate limit of the City of Federal Heights and unincorporated Adams County in that the traffic signals located at the northeast and northwest corners of the 84th Avenue Intersection are located in the City Federal Heights, and the signals located at the southeast and southwest corners of the 84th Avenue Intersection are located in unincorporated Adams County; and

WHEREAS, the City and the County entered into an Intergovernmental Agreement dated May 1, 1992, whereby the County maintains the signals located at all four corners of the 84th Avenue Intersection; and

WHEREAS, the County will be resurfacing 84th Avenue from Zuni Street to Greenwood Boulevard with the County's 2020 Street Paving Program (the "Program"), portions are within the City's jurisdiction, as shown in **EXHIBIT A**, attached hereto and incorporated herein by this reference; and

WHEREAS, as part of the Program, the City of Federal Heights and County Improvements will include the following at the 84th Avenue Intersection:

- Install curb and gutter, sidewalks, handicapped accessible ramps, and curb returns
- Install gutter pan on the southern portion of the intersection
- Install pedestrian push buttons at all corners of the intersection
- Reconstruct the traffic signal pole at the northeast corner of the intersection
- Install the accessible pedestrian signal at all corners of the intersections
- Mill 2-inch asphalt pavement and overlay 2 1/2-inch stone matrix asphalt pavement on W. 84th Avenue between Zuni Street and Greenwood Boulevard; and

WHEREAS, the City shall acquire fee title for Right-of-Way (ROW) at the northeast corner of the intersection for the traffic signal reconstruction. The City shall provide the title commitment to the County; and

WHEREAS, the County has requested, and the City is agreeable, that the City reimburse the County based on the City's portion of the cost for that portion of the Program located within the City's jurisdiction; and

NOW, THEREFORE, in consideration for the making and performance of the mutual promises and covenants contained herein the parties agree as follows:

1. AGREEMENT

Subject to the terms and conditions set forth in this IGA, including the recitals set forth above, which are hereby incorporated into this Agreement by this reference, the Parties hereby agree to contribute to the actual Program costs.

2. CITY CONTRIBUTION - PAYMENTS

a. The City shall pay the County based on the City's portion of the actual cost incurred by the County for work performed within the City's jurisdiction. The location of the work to be performed within the City's jurisdiction is identified in the map attached hereto and incorporated herein as **EXHIBIT A**. An estimate of the expenditures for the City's contribution is two hundred forty thousand five hundred thirty-eight dollars and forty-nine cents ($240,538.49). Upon completion of the Program, the County shall send an invoice to the City, with approved quantities and unit prices, and the City shall pay the County within thirty (30) days of receipt of the invoice.

b. In the event the City objects to a change in quantities in the field, or a contract revision, the Parties shall meet to reach agreement on the amount of the City's contribution.

c. If the Parties fail to reach such agreement at said meeting, the City shall provide its written objection to the County within five (5) days after the meeting for final consideration. If no agreement is reached within thirty (30) days of the date of the City's written objection, the Parties agree to submit to non-binding mediation in accordance with Colorado law.

3. AUTHORITY TO MANAGE, ENGINEER, ADVERTISE, CONTRACT, CONSTRUCT AND INSPECT

a. The City hereby authorizes the County to manage, advertise, contract, construct and inspect the Program, specifically those portions of the Program within the City's jurisdiction; provided, however, prior to construction, the County's contractor shall obtain a City Right-of-Way Permit for any work conducted within the City's jurisdiction. Subject to the foregoing, the County shall have full control over all aspects of the management, advertisement, contracting, construction and inspection for the Program until construction has been completed. Once construction has been completed, each Party shall be responsible to maintain the portions of the Program lying within their respective jurisdictions. The Intergovernmental Agreement dated May 1, 1992, whereby Adams County maintains the signals located at all four corners of the 84th Avenue Intersection, will need to be revised to include any new traffic signal components.

b. The City may inspect those portions of the Program within the City's jurisdiction at any time prior to completion and again upon notice of completion from the County. Reasonable changes identified by the City will be discussed with the County for evaluation and

the possibility of incorporation into the Program. Any such changes shall be at the County's sole discretion; provided, however, that any changes mandated by the City's Standards and Specifications for Public Improvements shall be compulsory for those portions of the Program within the City's jurisdiction.

4. COOPERATION

The City and the County hereby agree that, upon execution of this Agreement and commencement of the Program, the Parties will cooperate with each other to the fullest extent in the scheduling of the work, supervision, and review when applicable to ensure the successful completion of the Program. The City may inspect those portions of the Program within the City's jurisdiction but shall communicate to the Contractor through the County. The County agrees to use its best efforts to complete all work contemplated by this Agreement by November 30, 2020.

5. WARRANTY

The Parties agree that any contracts awarded for the construction of the Program shall be covered by warranty provided by the selected contractor for a one (1) year period from the date of completion and acceptance of the work by the County, and that surety shall be provided by the selected contractor for enforcement of this warranty.

6. INSURANCE AND INDEMNIFICATION

a. During the term of this Agreement, the Parties shall maintain property and general liability insurance in commercially reasonable amounts. Both Parties may meet this obligation through their membership in the insurance pool provided by the Colorado Intergovernmental Risk Sharing Agency (CIRSA).

b. The County shall require that all contractors, subcontractors, and independent contractors employed by the County for the Program maintain property, general liability and statutory worker's compensation insurance in such amounts as to insure both the County and the City as an additional insured, to the statutory limits of their liability. The County shall require that all contractors, subcontractors, and independent contractors employed by the County for the Program name the City as an additional insured on said policies to the same extent and degree and with all the same rights and privileges as the County.

c. The County shall require that all contractors, subcontractors, and independent contractors employed by the County for the Program shall indemnify, defend and hold harmless the County and the City, and their respective officials, and employees from and against any and all claims, demands, suits, actions, proceedings, judgments, losses, damages, injuries, penalties, costs, expenses (including attorney's fees) and liabilities of, by or with respect to third parties to the extent they arise, or may be alleged to arise, directly or indirectly, in whole or in part, from the intentional misconduct or negligent acts or omissions of the selected Contractor, the selected Contractor's subcontractors, suppliers, and/or employees in connection with work on the Program.

7. ADDITIONAL DOCUMENTS OR ACTION

The Parties agree to execute any additional documents or to take such additional action as may be necessary to carry out this Agreement.

8. ASSIGNMENT

This Agreement shall not be assigned by either Party without the prior written consent of the other Party.

9. FORCE MAJEURE

Any delays in or failure of performance by any Party of its obligations under this Agreement shall be excused if such delays or failure are a result of acts of God, fires, floods, strikes, labor disputes, accidents, regulations or orders of civil or military authorities, shortages of labor or materials, or other causes, similar or dissimilar, which are beyond the control and such Party.

10. BINDING EFFECT

This Agreement shall inure to the benefit of, and be binding upon, the Parties, their respective legal representative, successors, heirs, and assigns; provided, however, that nothing in this paragraph shall be construed to permit the assignment of this Agreement except as otherwise expressly authorized herein.

11. EXHIBITS

All exhibits referred to in this Agreement are, by reference, incorporated herein for all purposes.

12. NOTICES

Written notices required under this IGA and formal correspondence among the Parties shall be directed to the following and shall be deemed received as of the date of hand-delivery, or as of the date indicated on the return receipt request of a certified mailing:

If to the City of Federal Heights:

City Manager
City of Federal Heights
2380 W. 90th Avenue
Federal Heights, CO 80260

If to the County:

Public Works Director
Adams County Public Works Department
4430 South Adams County Parkway, 1st Floor – Suite W2000B
Brighton, CO 80601-8218

13. PARAGRAPH CAPTIONS

The captions of the paragraphs are set forth only for the convenience and reference of the Parties and are not intended in any way to define, limit or describe the scope or intent of this Agreement.

14. INTEGRATION AND AMENDMENT

This Agreement represents the entire agreement between the Parties and there are no oral or collateral agreements or understandings. This Agreement may be amended only by an instrument in writing signed by the Parties. If any other provision of the Agreement is held invalid or unenforceable, no other provision shall be affected by such holding, and all of the remaining provisions of this Agreement shall continue in full force and effect.

15. DEFAULT

Time is of the essence. If any payment or any other condition, obligation, or duty is not timely made, tendered or performed by either Party, then this Agreement, at the option of the Party who is not in default, maybe terminated by the nondefaulting Party, in which case, the nondefaulting Party may recover such damages as may be proper. If the nondefaulting Party elects to treat this Agreement as being in full force and effect, the nondefaulting Party shall have the right to an action for specific performance or damage or both.

16. WAIVER OF BREACH

A waiver by any Party to the Agreement of the breach of any term or provision of this Agreement shall not operate, or be construed as, a waiver of any subsequent breach by either Party.

17. GOVERNING LAW AND VENUE

This Agreement shall be governed by the laws of the State of Colorado. Venue for any action arising under this Agreement or for the enforcement of this Agreement shall be in the appropriate court for Adams County, Colorado.

18. GOVERNMENTAL IMMUNITIES

a. The Parties hereto intend that nothing herein shall be deemed or construed as a waiver by either Party of any rights, immunities, limitations or protections afforded to them under the Colorado Governmental Immunity Act (Section 24-10-101, C.R.S., *et seq.*)

b. The County and the City agree that in the event any claim or suit is brought against either or both Parties by any third party as a result of the operation of this Agreement that both Parties will cooperate with each other, and with the insuring entities of both Parties, in defending such claim or suit.

19. ILLEGAL ALIENS - PUBLIC CONTRACTS FOR SERVICES

The County shall require that the selected Contractor for the Program and its subcontractors are in compliance with CRS §8-17.5-101, *et seq.*

[The remainder of this page intentionally left blank. Signature page(s) follow(s).]

IN WITNESS WHEREOF, the Parties have caused this IGA to be executed as of the day and year first written above.

City of Federal Heights,
A Colorado home rule municipal corporation

By: Linda Montoya, Mayor
2380 West 90th Avenue
Federal Heights, Colorado 80260

ATTEST:

Patti Lowell, CMC, City Clerk

APPROVED AS TO FORM:

William P. Hayashi, City Attorney

BOARD OF COUNTY COMMISSIONERS ADAMS COUNTY, COLORADO

By: Chairman of the Board

ATTEST:

Deputy Clerk

APPROVED AS TO FORM:

County Attorney

EXHIBIT A

CITY OF FEDERAL HEIGHTS PAVING LOCATION WITH ADA RAMP LOCATIONS AND TRAFFIC SIGNAL RECONSTRUCTION

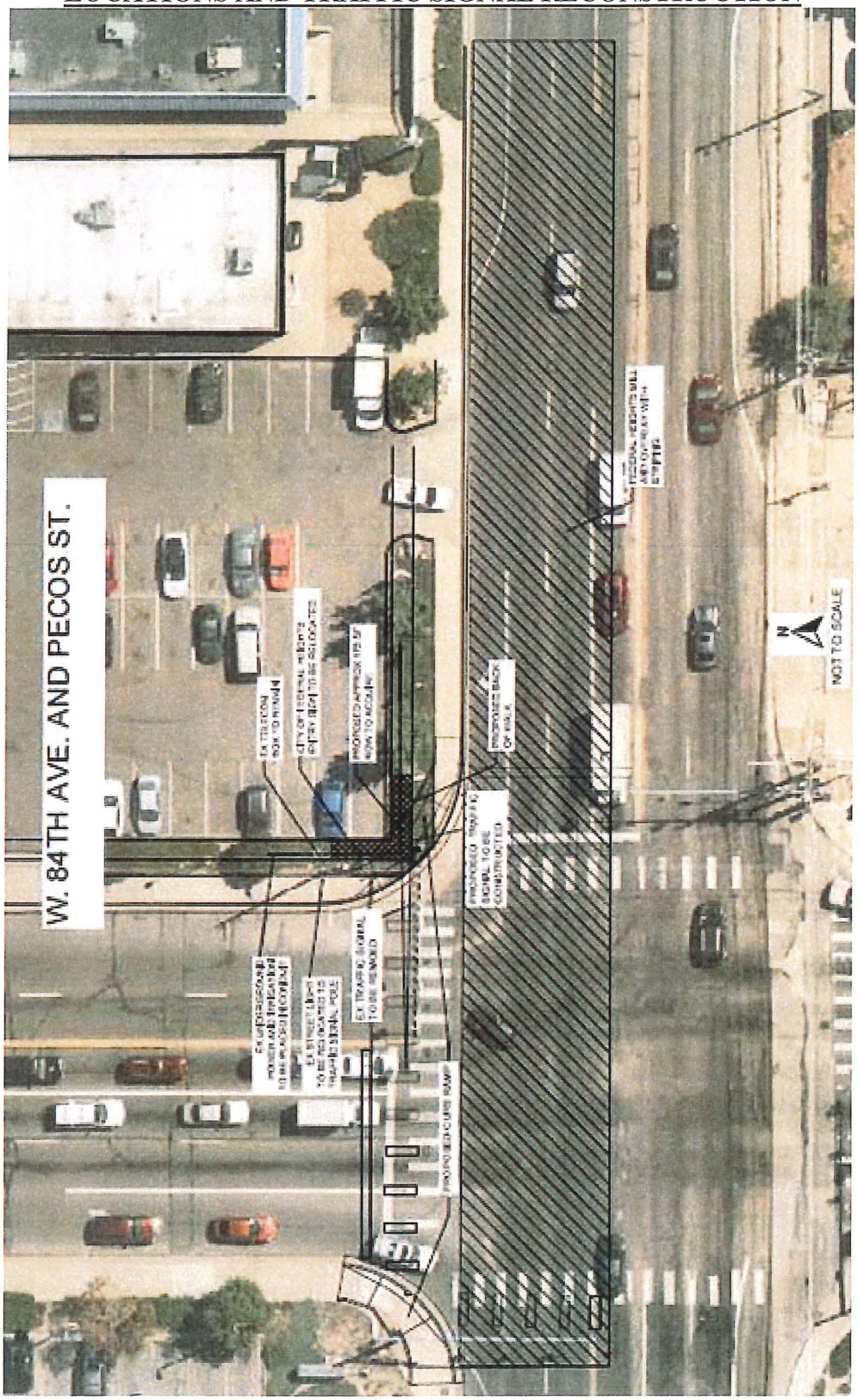

PUBLIC HEARING AGENDA ITEM

DATE OF PUBLIC HEARING: May 19, 2020
SUBJECT: York Street Phase I – Intergovernmental Agreement
FROM: Kristin Sullivan, AICP, Director, Public Works
AGENCY/DEPARTMENT: Public Works
HEARD AT STUDY SESSION ON February 11, 2020
AUTHORIZATION TO MOVE FORWARD: ☒ **YES** ☐ **NO**
RECOMMENDED ACTION: That the Board of County Commissioners approves the Agreement with North Washington Street Water and Sanitation District

BACKGROUND:

Adams County and North Washington Street Water and Sanitation District, a Colorado quasi-municipal corporation and agency of the State of Colorado, desire to enter into an intergovernmental agreement regarding the York Street Phase I project. The District owns and maintains a domestic water supply system and a sewer main system in County right-of-way that is affected by the project. The County agrees to include the relocation and/or adjustment of the District's water & sewer facilities within the project. The District agrees to cost sharing with the County for all costs associated with the relocation and/or adjustment of the District's water & sewer facilities. The agreement outlines the responsibilities of both the District and Adams County regarding the project and associated costs. The District has approved and signed the agreement.

AGENCIES, DEPARTMENTS OR OTHER OFFICES INVOLVED:

Adams County Public Works
County Attorney's Office
North Washington Street Water & Sanitation District

ATTACHED DOCUMENTS:

Resolution
Intergovernmental Agreement

FISCAL IMPACT:

Please check if there is no fiscal impact ☐. If there is fiscal impact, please fully complete the section below.

Fund: 00013

Cost Center: 3056

	Object Account	Subledger	Amount
Current Budgeted Revenue:			
Additional Revenue not included in Current Budget:			
Total Revenues:			

	Object Account	Subledger	Amount
Current Budgeted Operating Expenditure:			
Add'l Operating Expenditure not included in Current Budget:			
Current Budgeted Capital Expenditure:	9135	30562001	10,000,000
Add'l Capital Expenditure not included in Current Budget:			
Total Expenditures:			$10,000,000

New FTEs requested: ☐ **YES** ☒ **NO**

Future Amendment Needed: ☐ **YES** ☒ **NO**

Additional Note:

BOARD OF COUNTY COMMISSIONERS FOR
ADAMS COUNTY, STATE OF COLORADO

RESOLUTION APPROVING AN INTERGOVERNMENTAL AGREEMENT BETWEEN THE NORTH WASHINGTON STREET WATER AND SANITATION DISTRICT AND THE COUNTY OF ADAMS REGARDING THE YORK STREET PHASE I PROJECT

WHEREAS, Adams County and the North Washington Street Water and Sanitation District (the "District") desire to enter into an Intergovernmental Agreement (the "IGA") regarding the York Street Phase I project (the "Project"); and,

WHEREAS, the District owns and maintains a domestic water supply system and a sewer main system in County right-of-way that is affected by the Project; and,

WHEREAS, the County agrees to include the relocation and/or adjustment of the District's water & sewer facilities within the Project; and,

WHEREAS, the District agrees to cost sharing with the County for all costs associated with the relocation and/or adjustment of the District's water & sewer facilities; and,

WHEREAS, the IGA outlines the responsibilities of both the District and the County regarding the Project and associated costs; and,

WHEREAS, the North Washington Street Water and Sanitation District has approved and signed the Agreement.

NOW, THEREFORE, BE IT RESOLVED, by the Board of County Commissioners, County of Adams, State of Colorado, that the Intergovernmental Agreement between the North Washington Street Water and Sanitation District and Adams County regarding the York Street Phase I project, two copies of which are attached hereto and incorporated herein by this reference, is hereby approved.

BE IT FURTHER RESOLVED, that the Chair is authorized to execute said agreement on behalf of Adams County.

INTERGOVERNMENTAL AGREEMENT BETWEEN ADAMS COUNTY, COLORADO AND NORTH WASHINGTON STREET WATER AND SANITATION DISTRICT REGARDING YORK STREET IMPROVEMENTS FROM EAST 78TH AVENUE TO HIGHWAY 224

This INTERGOVERNMENTAL AGREEMENT (the "IGA") is made and entered into effective this _ day of_____, 2020, by and between the County of Adams, Colorado ("County"), and the North Washington Street Water and Sanitation District, a Colorado quasi-municipal corporation and agency of the State of Colorado ("District"). The County and the District collectively are hereto referred to as "Parties."

WHEREAS, pursuant to Art. XIV, § 18(2)(a) of the Colorado Constitution, and
§ 29-1-203, C.R.S., as amended, the Parties may cooperate or contract with each other to provide any function or service lawfully authorized to each; and

WHEREAS, the County anticipates reconstructing its roadways on York Street from East 78th Avenue to Highway 224 in the Welby Neighborhood area; and

WHEREAS, the District desires to collaborate with the County to improve certain water lines in the Welby Neighborhood area and in conjunction with the County roadway improvements; and

WHEREAS, the County shall complete the design of its street and drainage improvements so the bid requests for the project can be published on or before March 1, 2020. Upon approval by the County, the roadway improvement plans will be attached hereto as **Exhibit A** (the "County Improvements") and incorporated herein by this reference; and

The District, at the County's expense, shall complete the design of the water line relocation so that the water line improvements can be submitted to Denver Water for approval and bid requests for the project can be published on or before March 1, 2020. The District will submit to the County, through its department of public works, for the County's approval, two (2) sets of the design, detail plans, specifications and cost estimates for the proposed relocation and/or adjustments to the District's water and sewer utilities which are necessitated by the Project. The District's submittal shall be made well in advance of any proposed County contract bid request in order to avoid or minimize delay. Upon approval by the County, the design, detail plans, specifications and cost estimates for the proposed relocation and/or adjustments to the District's water utilities which are necessitated by the project shall be attached hereto as **Exhibit B** (the "Water Improvements") and incorporated herein by this reference; and

WHEREAS, the District has completed the design, detail plans, specifications and cost estimates for the proposed relocation and/or adjustments to the District's sewer utilities. The District sewer design, detail plans, specifications and cost estimates are attached hereto as **Exhibit C** (the "Sewer Improvements") and incorporated herein by this reference; and

WHEREAS, the County Improvements will include the following:

- Reconstruct roadways with full depth asphalt pavement
- Install curb and gutter, sidewalks, handicapped accessible ramps, and curb returns
- Remove and reset fences and gates
- Provide pavement markings
- Storm sewer pipelines, inlets, box culverts and manholes

WHEREAS, the Water Improvements and the Sewer Improvements (together "District Improvements") will include the following:

- Water Main Relocation
  - Remove and replace water lines, manholes, fire hydrants, water meters, valve boxes and service lines which are necessitated by the County Improvements

- Sewer Improvement
  - Relocations and/or adjustments to the District's sewer main system and manholes; and

WHEREAS, the District shall supervise, inspect and approve the work as it progresses on the District Improvement due to the specialized nature of water and sewer facilities.

NOW, THEREFORE, in consideration of the mutual covenants and agreements herein contained, the Parties agree as follows:

1. Project Construction. The County will contract for construction of the County Improvements, Water Improvements and Sewer Improvements (together the "Project") through its normal procurement process and in compliance with all Colorado statutes. All requests for bids submitted by the County shall contain a separate bid request for Water Improvements and a separate bid request for the Sewer Improvements. To be accepted, the bid for Water Improvements and Sewer Improvements must be listed and itemized at unit pricing for materials and installation. All bids for the Project will be required to list the name of any subcontractor that will be constructing/installing and portion of the District Improvements and County Improvements. The County intends to award the contract for the Project (the "Project Contract") to the lowest responsible and responsive bidder. The

District shall be informed of the date and time of the bid opening and a designated agent for the District shall be permitted to attend the bid opening. The County will notify the District of the apparent lowest responsible and responsive bidder, and the District's designated agent will have the opportunity to accept or reject the bid for the District Improvements in the District's sole discretion.

2. **Project Costs, Cost Sharing and Payment.**

a. The Project's Cost Estimate **(Exhibit D)** is incorporated herein by reference. The Project's Cost Estimate is comprised of the sum of three schedules: **Schedule A** contains the estimated costs associated with the County Improvements, which are estimated in the amount of $5,807,000.00; **Schedule B** contains the estimated costs associated with the District Improvements, which are estimated in the amount of $1,780,000.00; and **Schedule C** contains the estimated costs associated with Administrative Expenses for the Project that are to be equitably shared between the County and the District, as set forth in Section 2.j., below, which are estimated in the amount of $455,632.00.

b. The County will pay for the costs of the County Improvements of the Project identified in **Schedule A** of the Project's Cost Estimate **(Exhibit D),** plus the County's equitable portion of **Schedule C** of the Project's Cost Estimate **(Exhibit D).**

c. The County will reimburse the District for the costs of the District's engineer to design the County Plans as requested by the County in the amount of $37,000.

d. The County will contribute $250,000.00 toward the Water Improvements portion of **Schedule B** of the Project's Cost Estimate **(Exhibit D).**

e. The County's cost estimate in **Schedule A** of **Exhibit D** – County improvements also includes a contingency of approximately 5% of the estimated cost of construction to cover minor revisions to the Project Contract or change orders that are the responsibility of the County during construction.

f. Except as provided in this Agreement, neither Party shall be responsible for the costs of the other Parties' Improvements.

g. The District will pay for the actual costs associated with the District Improvements, which are estimated in **Schedule B** of

the Project's Cost Estimate **(Exhibit D)** plus the District's equitable portion of **Schedule C** of the Project's Cost Estimate **(Exhibit D).**

h. The District Improvements cost estimate in **Schedule B** of **Exhibit D** includes a contingency of approximately 5% of the estimated cost of construction to cover minor revisions to the Project Contract or change orders that are the responsibility of the District during construction. All minor contract revisions or change orders which relate to the District Improvements shall be the responsibility of the District. Any contract revisions or change orders that affect the construction of the District Improvements or increase the cost to the District shall be presented to the District and approved in writing by the District prior to the County including such work in the Project.

g. The County agrees to absorb the following costs of the Project (which are not included in **Schedule A** of the Project's Cost Estimate **(Exhibit D)):**

Design engineering, construction inspection, construction engineering, and construction management of the County Improvements (to be conducted by County personnel and County consultants).

h. The District agrees to absorb the following cost of the Project (which are not included in **Schedule B** of the Project's Cost Estimate (**Exhibit D**) construction of District Improvements; and
construction of District Improvements; and, design engineering, inspection, construction engineering, and construction management of the District Improvements that are conducted by District personnel and District engineers, inspectors and/or consultants.

i. There are certain expenses associated with construction that will become more efficient and therefore will be reduced in aggregate by consolidating the County and the District Improvements (Water Improvements and the Sewer Improvement) into one Project Contract (the "Administrative Expenses"). For the purposes of this Project these expenses will be defined in **Schedule C** of the Project's Cost Estimate **(Exhibit D**) and include:

1. Potholing
2. Public Information Services

3. Storm Water Quality, Erosion and Sediment Control
4. Materials Testing
5. Mobilization
6. Traffic Control
7. Construction Surveying
8. Other Expenses, as appropriate

j. The County and the District shall equitably share the actual costs of the Administrative Expenses in **Schedule C** of **Exhibit D**, as follows:

(1) The County's portion of the actual Administrative Expenses (**Schedule C**) shall be based upon the actual construction costs for the County Improvements contained in the awarded Project Contract. Therefore, the County's portion of the actual Administrative Expenses would be calculated using the actual Project Contract amounts as follows: [**Schedule C** * **Schedule A/** (the total of **Schedule A** plus **Schedule B** of **Exhibit D**)], for example: [$455,632.00 * $5,807,000.00 /($5,807,000.00 + $1,780,000.00)=$348,735.00].

(2) The District's portion of the actual Administrative Expenses (**Schedule C** of **Exhibit D**) shall be based upon the actual construction costs for the District Improvements contained in the awarded Project Contract. Therefore, the District's portion of the actual Administrative Expenses would be calculated by using the actual Project Contract amounts as follows: [**Schedule C** * **Schedule B** / (the total of **Schedule A** plus **Schedule B** of **Exhibit D**)] , for example: [$$455,632.00 * $1,780,000.00 / ($5,807,000.00 + $1,780,000.00) =$106,897.00].

(3) Each Parties' percentage of Administrative Expenses will be adjusted based on the actual final Project costs of the County Improvements and the District Improvements.

3. **Payments.**

The District has appropriated the funds for the District Improvements, being the total of the expenses listed in **Schedule B** of **Exhibit D** plus the District's portion of **Schedule C** of **Exhibit D,** less the County's $250,000.00 contribution to the District, the total contribution by the District to the Project is estimated to be $1,636,897.00 Construction changes authorized by the District as provided herein shall be paid to the County, as needed. After completion of work for which payment

is needed, the County shall submit a verified, detailed, itemized statement showing all reimbursable actual costs and expenses. After the District has checked that statement and has ascertained that it is correct and confirms that it is reimbursable work and in compliance with other requirements of the plans and specifications for District Improvements, and is otherwise proper, the District will reimburse the County for the actual costs and expenses thus billed. As the District Improvements are completed and the District has inspected and accepted the work as complete on the District Improvements the District will distribute the final payment amount to the County prior to issuance or final payment to the Project contractor. The County shall be responsible for assuming compliance with all requirements of §38-26-107, C.R.S.

4. **Authority to Manage, Advertise, Contract, and Construct.**

a. The District hereby authorizes the County to manage, advertise, contract and construct the Project; provided, however, that any portions of the Project constructed for the District Improvements shall be at all times subject to District supervision, inspection and approval, meet or exceed the District's, Denver Water's Design and Construction Standards for Water and Wastewater Facilities and specifications and shall be in compliance with plans approved by the District in writing in advance of construction. The County will use reasonable care and act in good faith in managing, advertising, contracting and constructing the Project. Prior to construction, the County's contractor shall obtain all required permits, payment bonds, performance bonds associated with the work on the District Improvements. Subject to the foregoing and Section 4.b. hereof below, the County shall have full control over all aspects of the management, advertisement, contracting, and construction of the Project until construction has been completed. Once construction has been completed, the County shall own the County Improvements and the District shall own the Water Improvements and the Sewer Improvements portions of the Project.

b. The District shall be referred to as an "Owner" under the Project Contract with respect to the District Improvements and shall be entitled to those rights and remedies set forth in the Project Contract for an Owner with respect to the District Improvements. The District shall have the right to review the Project Contract prior to execution by the County, and, if the District requests any changes to the Project Contract, the County shall duly consider the District's requests. If the Parties cannot reach agreement on incorporating the requested changes in the Project Contract or if the bids received for the Water Improvements or Sewer Improvements are not acceptable to the District, either Party may terminate this IGA. The Project

Contract will include a provision that any required insurance list the District and its employees, officers and consultants as an additional insured and that any payment bond or performance bond may be enforced by the County at the written request of the District.

c. The Project Contract shall contain a provision to transfer ownership of the District Improvements to the District via a Bill of Sale, with a minimum of a one-year warranty bond on the District Improvements from the date of transfer of ownership to the District, guaranteeing the District Improvements are free from defects in materials, equipment, and workmanship. All warranties on the District Improvements will be assigned to the District upon the District's acceptance of the District Improvements.

d. The District shall inspect the District Improvements and related portions of the Project during and after construction, subject to the Project's safety program. Reasonable changes, including inspection issues identified by the District, will be discussed with the County for evaluation and the possibility of incorporating them into the Project. Requested changes shall be at the County's sole discretion; provided, however, that the County shall approve change requests: (1) for work performed for the District that is mandated by the District's Design and Construction Standards for Water and Wastewater Facilities or (2) for work requested by the District that does not result in any Project delay claims, provided that the District agrees to pay any Project cost increases that result from the change order.

e. The County shall provide the District with portable document format (PDF) and AutoCAD files of the as-built plans of the roadway and storm sewer plans within 30 days following the completion of construction.

f. The District shall be responsible for the inspection of the District Improvements, including, but not limited to, relocations, removals, adjustments, and additions. The District's engineer shall provide as-builts for the District Improvements to the County.

g. The District shall be responsible for approval and acceptance of all material and workmanship used on the District Improvements.

h. The District agrees to designate an agent capable of analyzing construction situations and recommending courses of action that are acceptable to the District, regarding the District Improvements. The District's initial designated agent is the District Manager.

i. The District agrees to authorize its agent to immediately obligate District funds to address differing site conditions and approve change orders that arise during construction. Providing this authority to a District agent will minimize the potential for contractor delay claims to the Project. The District agrees to grant its agent the authority to obligate up to $50,000 of District funds per occurrence, up to the total amount contained in **Schedule B** of the Project's Cost Estimate **(Exhibit D),** provided such expenses are approved by the District's agent in writing prior to commencement of such work. Such expenses shall be a part of the total amount reflected in change orders approved by the District.

5. **Term.** The term of this IGA shall be from the date first written above through September 30, 2021.

6. **Non-Appropriation - No Remedy.**

a. The County understands, and the District agrees, that the District will use its best efforts to appropriate funds on a fiscal year by fiscal year basis sufficient to make the payments contemplated herein. However, in the event the District fails to appropriate sufficient funds to make such payments, the County shall have no remedy at law or in equity to enforce the terms of this IGA.

b. The Parties agree and acknowledge that based on the foregoing, this IGA does not constitute a multiple fiscal year debt or financial obligation of the District pursuant to Article X, Section 20 of the Colorado Constitution.

7. **No Partnership or Agency.** Notwithstanding any language in this IGA, or any representation or warranty to the contrary, neither the District nor the County shall be deemed or constitute a partner, joint venture, or agent of the other. Any actions taken by the Parties pursuant to this IGA shall be deemed actions as an independent contractor of the other.

8. **No Third-Party Beneficiaries.** It is expressly understood and agreed that enforcement of the terms and conditions of this IGA and all rights of action relating to such enforcement shall be strictly reserved to the Parties. It is the express

intention of the Parties that any person, other than the Parties, shall be deemed to be only an incidental beneficiary under this IGA.

9. **Governing Law and Venue; Recovery of Costs.** This IGA shall be governed by the laws of the State of Colorado, and venue shall be in Adams County, Colorado. In the event legal action is brought to resolve any dispute among the Parties related to this IGA, the Parties shall pay their own court costs and attorney fees.

10. **Governmental Immunity.** No term or condition of this IGA shall be construed or interpreted as a waiver, express or implied, of any of the immunities, rights, benefits, protections or other provisions of the Colorado Governmental Immunity Act, C.R.S. §§ 24-10-101, *et seq.*

11. **Authority.** The Parties represent and warrant that they have taken all actions necessary to legally authorize the undersigned signatories to execute this IGA on behalf of the Parties and to bind the Parties to its terms.

12. **Entire Agreement.** This IGA contains the entire agreement of the Parties relating to the subject matter hereof and, except as provided herein, may not be modified or amended except by written agreement of both Parties.

13. **Counterparts.** This IGA may be executed in counterparts, each of which shall constitute one and the same instrument.

14. **Binding Effect.** This IGA can be assigned only with the consent of the other Party. This IGA shall be binding upon, and shall inure to the benefit of, the Parties and their respective heirs, personal representatives and successors and permitted assigns.

15. **Exhibits.** All exhibits referred to in this IGA are incorporated herein for all purposes.

16. **Effective Date.** This IGA shall be effective on the latest date by which both Parties have it adopted.

17. **Severability.** In the event a court of competent jurisdiction holds any provision of this IGA invalid or unenforceable, such holding shall not invalidate or render unenforceable any other provision of this IGA.

18. **Written Notices** required under this IGA and formal correspondence among the Parties shall be directed to the following and shall be deemed received as of the date of hand delivery, or as of the date indicated on the return receipt request of a certified mailing:

If to the County:

Public Works Director
Adams County Public Works Department
4430 South Adams County Parkway, Suite W2000B
Brighton, CO 80601-8218

If to the District:

District Manager
North Washington Street Water and Sanitation District
3172 East 78th Avenue
Denver, CO 80229

With Copy to:

Russ Dykstra
Spencer Fane, LLP
1700 Lincoln St., Suite 2000
Denver, CO 80203

[The remainder of this page intentionally left blank. Signature page(s) follow(s).]

IN WITNESS WHEREOF, the Parties have caused this IGA to be executed as of the day and year first written above.

COUNTY OF ADAMS

_____

Chair, Board of County Commissioners

ATTEST:

_____

Clerk to the Board

NORTH WASHINGTON STREET WATER AND SANITATION DISTRICT, a Colorado quasi-municipal corporation

_____

President

ATTEST:

_____

Secretary

APPOINTMENT

I, Victor Frank, Chairman of the Board of Directors of the North Washington St. Water & Sanitation District, by virtue of the authority vested in me by law, do hereby appoint Amerigo Svaldi as this District's representative on the Board of Directors of the Metro Wastewater Reclamation District (Metro), to serve a term of two years,beginning July 1, 2020, and ending June 30, 2022, in accordance with the laws of the State of Colorado and the Bylaws of the Metro Wastewater Reclamation District.

Dated this 16th day of April, 2020.

Chairman

BOARD APPROVAL OF APPOINTMENT

It was moved by Ted Rossi, seconded by Kenny Lombardi, that the Chairman's appointment of Amerigo Svaldi to serve a term of two years as this District's representative on the Board of Directors of the Metro Wastewater Reclamation District be and the same hereby is approved.

The motion carried unanimously.

STATE OF COLORADO
COUNTY OF Adams } §

CERTIFICATE

I, Secretary of North Washington St.Water/Sanitation, do hereby certify that the Chairman of the Board of Directors of said District appointed Amerigo Svaldi as said District's representative on the Board of Directors of the Metro Wastewater Reclamation District and that the foregoing "Appointment" is an excerpt from the minutes of the regular meeting of the Board of Directors held on the 16th day of April, 2020, and I further certify that the foregoing motion approving said appointment was passed by the Board of Directors at the same meeting; that said motion of approval is part of the official minutes of said meeting; and that a quorum was present at all times during the meeting.

Dated this 16th day of April, 2020.

Amerigo Svaldi
Secretary

(SEAL)

PUBLIC HEARING AGENDA ITEM

DATE OF PUBLIC HEARING: May 19, 2020
SUBJECT: Resolution approving right-of-way agreement between Adams County and Alejandro Covarrubias for property necessary for the 2019 Miscellaneous Concrete and ADA Ramps Project
FROM: Kristin Sullivan, AICP, Director of Public Works Brian Staley, P.E., PTOE, Deputy Director of Public Works
AGENCY/DEPARTMENT: Public Works
HEARD AT STUDY SESSION ON: N/A
AUTHORIZATION TO MOVE FORWARD: ☐ **YES** ☐ **NO**
RECOMMENDED ACTION: That the Board of County Commissioners approves the right-of-way agreement for acquisition of property needed for road right-of-way.

BACKGROUND:

Adams County is in the process of acquiring right-of-way along the Broadway Street-Conifer Road corridor from U.S. Highway 36 to 84th Avenue for the 2019 Miscellaneous Concrete and ADA Ramps Project. The intention of this Project is to identify and improve the overall mobility and accessibility of maturing neighborhoods with ADA accessibility connectivity including ADA-compliant sidewalks and the addition of ADA pedestrian ramps. Attached is a copy of the right-of-way agreement between Adams County and Alejandro Covarrubias for acquisition of road right-of-way for $830.00. The attached resolution allows the County to acquire ownership of the needed property for the use of the public and provide the necessary documents to close on the property.

AGENCIES, DEPARTMENTS OR OTHER OFFICES INVOLVED:

Adams County Public Works, Office of the County Attorney and Adams County Board of County Commissioners.

ATTACHED DOCUMENTS:

Draft resolution
Right-of-way agreement

FISCAL IMPACT:

Please check if there is no fiscal impact ☐. If there is fiscal impact, please fully complete the section below.

Fund: 13
Cost Center: 3058

	Object Account	Subledger	Amount
Current Budgeted Revenue:			
Additional Revenue not included in Current Budget:			
Total Revenues:			

	Object Account	Subledger	Amount
Current Budgeted Operating Expenditure:	7820		$1,000,000
Add'l Operating Expenditure not included in Current Budget:			
Current Budgeted Capital Expenditure:			
Add'l Capital Expenditure not included in Current Budget:			
Total Expenditures:			**$1,000,000**

New FTEs requested: ☐ **YES** ☒ **NO**

Future Amendment Needed: ☐ **YES** ☒ **NO**

Additional Note:

BOARD OF COUNTY COMMISSIONERS FOR
ADAMS COUNTY, STATE OF COLORADO

RESOLUTION APPROVING RIGHT-OF-WAY AGREEMENT
BETWEEN ADAMS COUNTY AND ALEJANDRO COVARRUBIAS
FOR PROPERTY NECESSARY FOR
THE 2019 MISCELLANEOUS CONCRETE AND ADA RAMPS PROJECT

WHEREAS, Adams County is in the process of acquiring rights-of-way along the Broadway Street-Conifer Road corridor from U.S. Highway 36 to 84th Avenue for the 2019 Miscellaneous Concrete and ADA Ramps Project ("Project"); and,

WHEREAS, the intention of this Project is to identify and improve the overall mobility and accessibility of maturing neighborhoods with ADA accessibility connectivity including ADA-compliant sidewalks and the addition of ADA pedestrian ramps where absent; and,

WHEREAS, this right-of-way acquisition is a portion of 447 Leona Drive located in the Southwest Quarter of Section 27, Township 2 South, Range 68 West of the 6th Principal Meridian, County of Adams, State of Colorado, and owned by Alejandro Covarrubias ("Parcel 12"); and,

WHEREAS, Adams County requires ownership of Parcel 12 for construction of the Improvements; and,

WHEREAS, Alejandro Covarrubias is willing to sell Parcel 12 to Adams County under the terms and conditions of the attached Right-of-Way Agreement.

NOW, THEREFORE, BE IT RESOLVED, by the Board of County Commissioners, County of Adams, State of Colorado, that the Right-of-Way Agreement between Adams County and Alejandro Covarrubias, a copy of which is attached hereto and incorporated herein by this reference, be and hereby is approved.

BE IT FURTHER RESOLVED, that the Chair of the Board of County Commissioners is hereby authorized to execute said Right-of-Way Agreement on behalf of Adams County.

Right-of-Way Agreement

This Agreement is made and entered into by and between **Alejandro Covarrubias** whose address is **447 Leona Drive, Denver, CO 80221** ("Owner"), and the County of Adams, State of Colorado, a body politic, who address is 4430 South Adams County Parkway, Brighton, Colorado, 80601 ("County") for the conveyance of rights-of-way on property located at **447 Leona Drive, Denver, CO** hereinafter (the "Property") for the 2019 Miscellaneous Concrete and ADA Ramps Project (the "Project"). The legal description and conveyance documents for the interests on said Property are set forth in Exhibit A attached hereto and incorporated herein by this reference.

The compensation agreed to by the Owner and the County for the acquisition of the Property interests described herein is **EIGHT HUNDRED THIRTY AND NO/100 DOLLARS ($830.00),** including the performance of the terms of this Agreement, the sufficiency of which is hereby acknowledged. The parties further agree that the consideration shall consist of $600.00 for the land acquisition of road right-of-way and $230.00 for split rail fence. This consideration has been agreed upon and between the parties as the total just compensation due to the Owner and the consideration shall be given and accepted in full satisfaction of this Agreement.

In consideration of the above premises and the mutual promise and covenants below, the Owner and the County agree to the following:

1. The Owner hereby warrants that the Owner is the sole Owner of the Property, that the Owner owns the Property in fee simple subject only to matters of record and that the Owner has the power to enter into this Agreement.

2. The Owner agrees to execute and deliver to the County the attached conveyance documents on the property upon tender by the County of a warrant (check) for the compensation agreed upon as soon as possible following the execution of this agreement.

3. Owner hereby irrevocably grants to the County possession and use of the property interests on the Property upon execution of this Agreement by the Owner and the County. This grant of possession shall remain in effect with respect to the Property until such time as the County obtains from the Owner the attached conveyance documents.

4. The County through its contractor shall assure that reasonable access shall be maintained to the Owner's property at all times for ingress and egress. If necessary, any full closure of access shall be coordinated between the contractor and the Owner and/or its agent.

5. The County will remove approximately 8 lineal feet of the timber split rail fence. But the County has agreed to reimburse the owner the expense of the lost split rail fence and made a part of this Agreement.

6. The Owner has entered into this Agreement acknowledging that the County has the power of eminent domain and required the Property for a public purpose.

7. If the Owner fails to consummate this agreement for any reason, except the County's default, the County may at its option, enforce this agreement by bringing an action against the Owner for specific performance.

8. This Agreement contains all agreements, understandings and promises between the Owner and the County, relating to the Project and shall be deemed a contact binding upon the Owner and County and extending to the successors, heirs and assigns.

9. Owner shall be responsible for reporting proceeds of the sale to taxing authorities, including the submittal of Form 1099-S with the Internal Revenue Service, if applicable.

10. This Agreement has been entered into in the State of Colorado and shall be governed according to the laws thereof.

Owner:

By: _____
Alejandro Covarrubias

Date: 3-11-20

Approved:

BOARD OF COUNTY COMMISSIONERS-COUNTY OF ADAMS, STATE OF COLORADO

_____ _____
Chair Date

Approved as to Form:

_____
County Attorney

QUITCLAIM DEED

THIS DEED, made this _____ day of _____, 2020, between **Alejandro Covarrubias,** whose legal address is 447 Leona Drive, Denver, CO 80221, grantor, and **The County of Adams, State of Colorado**, grantee, whose legal address is 4430 South Adams County Parkway, Brighton, Colorado 80601.

WITNESS, that the grantor, for and consideration of the sum of **EIGHT HUNDRED THIRTY AND NO/100 DOLLARS ($830.00)**, and other good and valuable consideration, the receipt and sufficiency of which is hereby acknowledged, has remised, released, sold and QUITCLAIMED, and by these presents does remise, release, sell and QUITCLAIM unto the grantee, its successors and assigns forever, all the right, title, interest, claim and demand which the grantor has in and to the real property, together with improvements, if any, situate, lying and being in the said County of Adams and State of Colorado, described as follows:

Legal description as set forth is Exhibit "A" attached hereto and incorporated herein by this reference.

Also known by street and number as: **447 Leona Drive**
Assessor's schedule or parcel numbers: part of **0171927321007**

TOGETHER with all and singular the hereditaments and appurtenances thereto belonging, or in anywise appertaining, the reversion and reversions, remainder and remainders, rents, issues and profits thereof, and all the estate, right, title, interest, claim and demand whatsoever of the grantor(s), either in law or equity, of, in and to the above bargained premises, with the hereditaments and appurtenances;

TO HAVE AND TO HOLD the same, together with all and singular the appurtenances and privileges thereunto belonging, or in anywise thereunto appertaining, and all the estate, right, title, interest and claim whatsoever of the grantor, either in law or equity, to the only proper use, benefit and behoove of the grantee, its successors and assigns forever.

The singular number shall include the plural, the plural the singular, and the use of any gender shall be applicable to all genders.

IN WITNESS WHEREOF, the grantor has executed this deed on the date set forth above.

BY: _____
Alejandro Covarrubias

STATE OF COLORADO)
) §
County of Adams)

The foregoing instrument was acknowledged before me this _____ day of _____, 2020, by Alejandro Covarrubias.

Witness my hand and official seal.

My commission expires:

_____
Notary Public

EXHIBIT "A"

DEED FROM ALEJANDRO COVARRUBIAS
TO
THE COUNTY OF ADAMS, STATE OF COLORADO

Legal Description

A parcel of land being a portion of Lot 14, Block 3, of the SHERRELWOOD ESTATES FILING NO. 8, a Subdivision recorded on November 8, 1962 in File No. 11 Map 11 Reception No. 679075 in the Office of the Clerk and Recorder of Adams County, Colorado, located in the Southwest Quarter of Section 27, Township 2 South, Range 68 West of the 6th Principal Meridian, being more particularly described as follows:

Beginning at the Southeasterly Corner of said Lot 14, thence North 48°43'26" East, along the Easterly line of said Lot 14, a distance of 10.00 feet;

Thence leaving said Easterly line, North 89°01'29" West, a distance of 14.80 feet to the beginning of a nontangent curve concave Southwesterly and having a radius of 125.00 feet, said curve being the Southerly line of said Lot 14;

Thence Southeasterly along said curve to the right, and the Southerly line of said Lot 14, a distance of 10.00 feet through a central angle of 4°35'06", with a chord bearing South 46°46'24" East and a chord distance of 10.00 feet to the Point of Beginning.

Containing: 50 square feet, more or less.

Legal description prepared by:

Ian Cortez, PLS
Colorado Professional
Land Surveyor No. 32822
For and on behalf of:
Adams County, Colorado

COLORADO REGISTERED
IAN CORTEZ
32822
4-12-18
PROFESSIONAL LAND SURVEYOR

Exhibit "B" attached and hereby made a part thereof.

EXHIBIT "B"

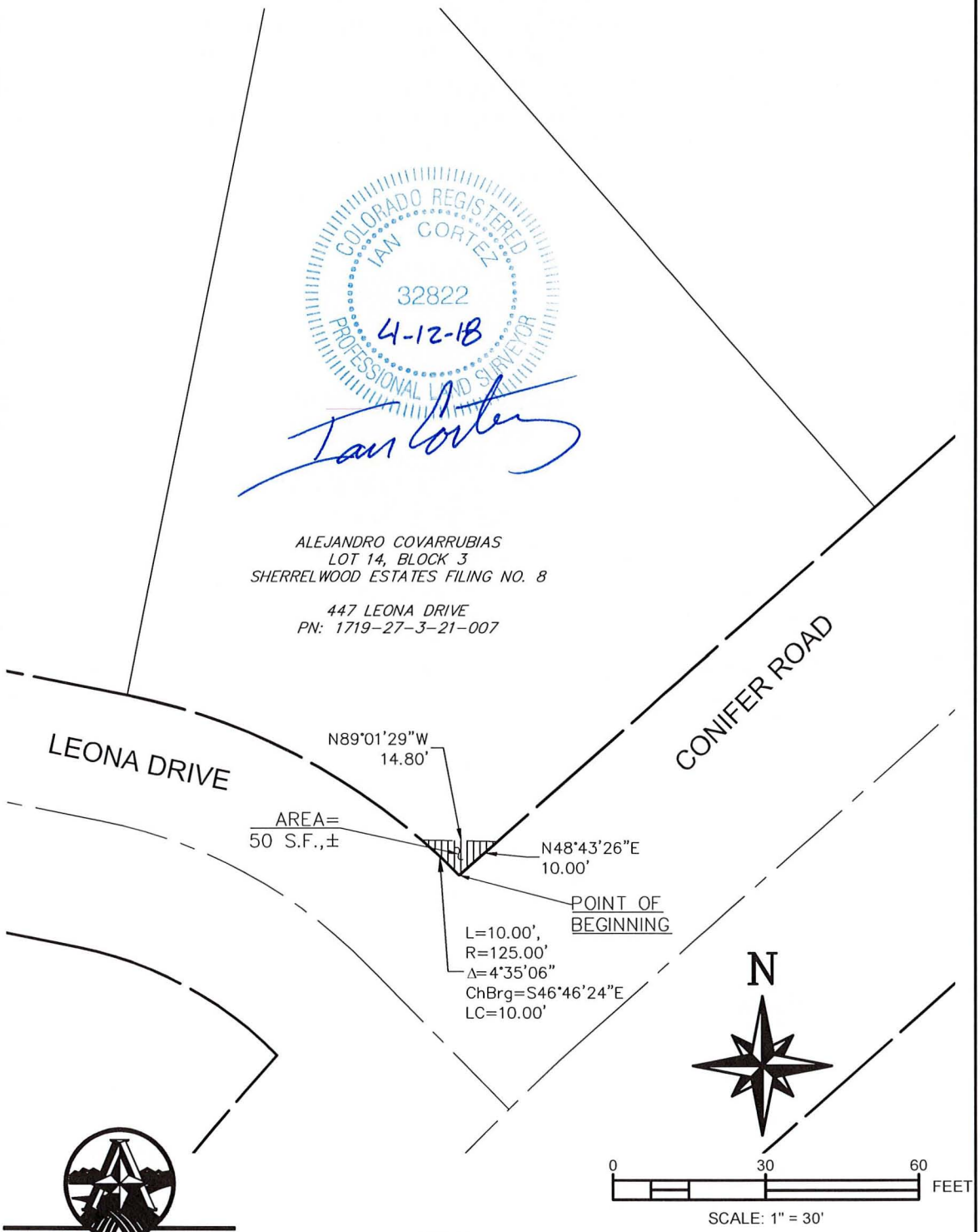

ADAMS COUNTY
COLORADO

THIS EXHIBIT IS NOT A BOUNDARY SURVEY AND SHOULD NOT BE USED AS SUCH. IT IS INTENDED ONLY TO DEPICT THE ATTACHED LEGAL DESCRIPTION.

PUBLIC HEARING AGENDA ITEM

DATE OF PUBLIC HEARING: May 19, 2020
SUBJECT: Resolution accepting an Intergovernmental Agreement from Regional Transportation District to the County of Adams for reimbursement of costs for the RTD Pedestrian Treatment Elements on Lowell Blvd.
FROM: Kristin Sullivan, AICP, Director of Public Works Brian Staley, P.E., PTOE, Deputy Director of Public Works
AGENCY/DEPARTMENT: Public Works
HEARD AT STUDY SESSION ON: N/A
AUTHORIZATION TO MOVE FORWARD: ☐ **YES** ☐ **NO**
RECOMMENDED ACTION: That the Board of County Commissioners accepts Intergovernmental Agreement from Regional Transportation District to the County of Adams for reimbursement of costs for the RTD Pedestrian Treatment Elements on Lowell Blvd.

BACKGROUND:

The Board approved the original Intergovernmental Agreement (IGA) with the Regional Transportation District (RTD) for the Gold Line and Electrified Northwest Rail on May 11, 2011. The attached resolution allows Adams County to enter into an IGA with RTD upon completion of the Pedestrian Treatment Elements, submit reimbursement request package(s) to RTD for reimbursement under this IGA.

AGENCIES, DEPARTMENTS OR OTHER OFFICES INVOLVED:

Adams County Public Works, Office of the County Attorney and Adams County Board of County Commissioners.

ATTACHED DOCUMENTS:

Draft Resolution RTD Pedestrian Treatments Elements Reimbursement
ADCO_RTD Lowell Blvd Ped Treatment Installation IGA

FISCAL IMPACT:

Please check if there is no fiscal impact ☐. If there is fiscal impact, please fully complete the section below.

Fund: 13

Cost Center: 3056

	Object Account	Subledger	Amount
Current Budgeted Revenue:			
Additional Revenue not included in Current Budget:			
Total Revenues:			

	Object Account	Subledger	Amount
Current Budgeted Operating Expenditure:			
Add'l Operating Expenditure not included in Current Budget:			
Current Budgeted Capital Expenditure:	3056	30562001	$10,000,000.00
Add'l Capital Expenditure not included in Current Budget:			
Total Expenditures:			$10,000,000.00

New FTEs requested: ☐ **YES** ☒ **NO**

Future Amendment Needed: ☐ **YES** ☒ **NO**

Additional Note:

BOARD OF COUNTY COMMISSIONERS FOR
ADAMS COUNTY, STATE OF COLORADO

RESOLUTION APPROVING AN INTERGOVERNMENTAL AGREEMENT BETWEEN ADAMS COUNTY AND THE REGIONAL TRANSPORTATION DISTRICT

WHEREAS, the Regional Transportation Department ("RTD") and Adams County (the "County"), herein referred to as the "Parties", desire to enter into an Intergovernmental Agreement (the "Agreement") regarding the installation and reimbursement of the Pedestrian Treatment Elements and additional sidewalk and roadway improvements in accordance with the Colorado Public Utilities Commission (the "PUC") Decision No. R15-0195 in Proceeding No. 14A-0894R (the "PUC Decision"); and,

WHEREAS, The Adams County Board of Commissioners approved the original Intergovernmental Agreement with RTD for the Gold Line and Electrified Northwest Rail on May 11, 2011; and,

WHEREAS, the County is currently constructing the Lowell Boulevard Roadway and Sidewalk Improvement Project (County Project No. IMP2013-00009), which includes the installation of the pedestrian treatment elements and additional sidewalk and roadway improvements in accordance with the PUC Decision; and,

WHEREAS, by means of the attached Agreement, the Parties desire to proceed with the Agreement.

NOW, THEREFORE, BE IT RESOLVED, by the Board of County Commissioners, County of Adams, State of Colorado, that the Agreement Between Adams County and RTD regarding the installation and reimbursement of the pedestrian treatment elements and additional sidewalk and roadway improvements, a copy of which is attached hereto and incorporated herein by this reference, be and is hereby approved.

BE IT FURTHER RESOLVED, that the Chair is authorized to execute said Agreement on behalf of Adams County.

INTERGOVERNMENTAL AGREEMENT BETWEEN
ADAMS COUNTY AND THE REGIONAL TRANSPORTATION DISTRICT

THIS INTERGOVERNMENTAL AGREEMENT (the "**IGA**") is made and executed this __ day of _____ 2020, between **ADAMS COUNTY**, Colorado, a county of the State of Colorado (the "**County**"), and the **REGIONAL TRANSPORTATION DISTRICT**, a political subdivision of the State of Colorado ("**RTD**"). The County and RTD may be referred to individually as a "**Party**" and collectively as the "**Parties**."

WHEREAS, RTD and Denver Transit Partners, LLC (the "**Concessionaire**") have already procured certain pedestrian treatment improvements (the "**Pedestrian Treatment Elements**") in accordance with the Colorado Public Utilities Commission ("**PUC**") Decision No. R15-0195 in Proceeding No. 14A-0894R (the "**PUC Decision**") and will immediately deliver to the County and their contractor Jalisco International Inc. project site and laydown area for completion of work within the railroad crossing. The Pedestrian Treatment Elements benefit the pedestrians crossing the RTD, Union Pacific Railroad ("**UPRR**"), and Burlington Northern Santa Fe Railway crossings located on the RTD G-Line corridor and UPRR Moffat Subdivision within the County.

WHEREAS, the County is directing Jalisco International Inc., as its contractor (the "**Contractor**") to construct the Lowell Boulevard Roadway and Sidewalk Improvement Project (County Project No. IMP2013-00009) (the "**ADCO Lowell Project**"), which includes the installation of the Pedestrian Treatment Elements and additional sidewalk and roadway improvements in accordance with the PUC Decision. The County and RTD have agreed that the Contractor will complete the Pedestrian Treatment Elements work as defined in Exhibit A (the "**ADCO Lowell Project Addendum Package**") at the cost described in Exhibit B (the "**Contractor Addendum Pricing Package**").

WHEREAS, the County and its design consultant designed the ADCO Lowell Project in accordance with the PUC Decision and the Adams County and Regional Transportation District Gold Line Corridor/Northwest Electrified Segment Local Agency Contribution Intergovernmental Agreement, as amended (the "**LAC IGA**") in coordination with the Concessionaire's design consultant.

WHEREAS, RTD and the Concessionaire designed the Pedestrian Treatment Elements in accordance with the PUC Decision and the LAC IGA in coordination with the County and the County's design consultant.

WHEREAS, the purpose of this IGA is to memorialize the agreement among the Parties with respect to the installation of the Pedestrian Treatment Elements in connection with the ADCO Lowell Project, as more particularly described in **Exhibit A** (the "**ADCO Project Addendum Package**") and **Exhibit B** (the "**Contractor Addendum Pricing Package**"), attached hereto and incorporated herein.

WHEREAS, each Party is authorized by Colorado law to enter into agreements with other local governments for the performance of public functions that they are authorized to perform on their own.

WHEREAS, each of the Parties has determined and hereby determines that the execution of this IGA is in the best interests of their respective constituents and taxpayers.

NOW, THEREFORE, for and in consideration of the mutual promises and covenants contained herein, the sufficiency of which are mutually acknowledged, the Parties hereto agree as follows:

AGREEMENT

1. **Acknowledgement and Incorporation of Recitals**. The foregoing recitals are hereby acknowledged by the Parties to be true and correct and are incorporated into this IGA.

2. **Term**. This IGA shall commence upon execution by the Parties and shall continue until the terms and conditions of this IGA are fulfilled.

3. **Agreement to Cooperate**. The Parties hereby state their intention to work cooperatively to complete the Project. More specifically, the Parties agree as follows:

    a. <u>County Obligations</u>.

        i. The County shall or shall cause its Contractor to:

            (i) Receive, inspect and accept the materials for the Pedestrian Treatment Elements delivered by the Concessionaire at a location selected by the County. RTD and its Concessionaire moved and located the material to RTD's facility located at 4941 E. 39th Ave. in Denver, Colorado (the "KIK Facility"). The material was moved and located to the KIK Facility because the ADCO Lowell Project site does not have a laydown area available to store the material. The County signed a materials inspection and receiving report at that time the material was moved and located to the KIK Facility. RTD and the Concessionaire distributed the signed report to the County for their records. The County or its Contractor shall coordinate with RTD to pick up the material at the KIK Facility. A materials inventory list is included in ***Exhibit A***.

            (ii) Procure channelization fence as defined in ***Exhibit A***. Costs of the channelization fence are included in ***Exhibit B***.

            (iii) Procure gate foundation material. Costs of the gate foundation material are included in ***Exhibit B***.

            (iv) Work with RTD Real Property to execute a Right of Entry ("**ROE**"), which executed ROE is attached hereto as ***Exhibit C*** and provide the insurance required therein. The ROE is required to access and work within RTD railroad Right-of-Way ("**ROW**") to match into the roadway and sidewalk improvements to the RTD railroad ROW previously completed by RTD/DTP. The ROE is also required to

move construction equipment back and forth across the RTD trackway to work on the ADCO Lowell Project.

(v) Coordinate with Concessionaire, UPRR and BNSF on Employee-In-Charge ("**EIC**") or flagging requirements. The County and its Contractor shall segregate costs associated with EIC or flagging requirements for installing the Pedestrian Treatment Elements from EIC or flagging requirements for the ADCO Lowell Project out of the not-to-exceed Force Account amount of $41,916, as depicted in ***Exhibit B***. The County shall cause the Contractor to minimize any impact to Concessionaire, UPRR and BNSF operations, including the Contractor's installation of a temporary barrier between the Contractor's work area and railroad tracks.

(vi) Provide construction work plans and schedule for the ADCO Lowell Project to RTD and the Concessionaire for coordination and review efforts prior to start of any work within the railroad crossing. Submittals shall be made to the RTD/DTO Third Party Project Committee via email and defined in Section 3(e) below.

(vii) Submit necessary track usage permit applications to the Concessionaire via email at track.usage@rtdcrail.com, copying the RTD/DTO Third Party Project Committee.

(viii) Construct the ADCO Lowell Project sidewalk and roadway improvements up to the sidewalk and roadway improvements previously constructed by DTP at the RTD ROW as required by the PUC Decision at no cost to RTD.

(ix) Construct and install the Pedestrian Treatment Elements as described in ***Exhibit A*** and the specification and drawings included as part of ***Exhibit A*** submitted to the County via email by RTD on January 9, 2019, known as the ADCO Lowell Project Addendum Package. RTD's costs shall be consistent with and not exceed the amount of $50,330 for capital improvements in ***Exhibit B*** (the "Capital Improvements") agreed to by RTD. The County and the Contractor shall request RTD's approval of any changes in the scope of work and costs defined in ***Exhibit B*** prior to the completion of such work. RTD will not approve any requests for changes made after the completion of work.

(x) Report any damage to any infrastructure within the RTD/UPRR/BNSF Right-of-Way immediately to the RTD/UPRR/BNSF project liaisons and submit claims to their respective insurance policies. The Contractor shall be responsible

for repairing infrastructure as set forth in the ROE attached as ***Exhibit C***.

(xi) Perform removal of portion of a UPRR foundation as described in ***Exhibit A***, which is approximately two (2) feet below sidewalk finish grade. Costs of such foundation removal are included in ***Exhibit B***.

(xii) Submit requests for information and construction submittals to the RTD Project Liaison (as defined in Section 3(f) below) for review, response and/or approval.

(xiii) Submit County construction inspection reports to the RTD Project Liaison shortly upon completion.

(xiv) Submit traffic control plans/Method of Handling Traffic to the RTD Project Liaison for any necessary coordination with the Concessionaire or RTD bus operations. Submit two weeks in advance of implementation of the traffic control.

(xv) Include the RTD Project Liaison and DTO in any construction progress meetings.

(xvi) Include the RTD Project Liaison and the Concessionaire in completion and punch list walks for final acceptance of the Pedestrian Treatment Element work. Submit punch list and completion logs to the RTD Project Liaison. The two (2) year warranty period for operation will begin upon final acceptance.

(xvii) Upon completion of the ADCO Lowell Project, complete the PUC process for the PUC Decision by coordinating with PUC staff to perform certification walks and memos for filing with the PUC within 14 days of completion or first available date for PUC staff. The County shall provide any proposed PUC filings related to the PUC Decision to RTD two weeks prior to submittal for RTD's review and comment.

(xviii) Upon completion of the ADCO Lowell Blvd Project, file final as-built drawings for the ADCO Lowell Blvd Project with the PUC and provide copies to RTD and the Concessionaire.

(xix) Upon completion of the Pedestrian Treatment Elements, submit reimbursement request package(s) to RTD for reimbursement under this IGA, including but not limited to documentation of Contractor or railroad invoices and payment from the County to the Contractor or railroad. The County will submit two separate reimbursement request packages as follows: (1) Capital Improvement cost items and (2) Railroad Flagger/EIC Force Account cost items, each as depicted in ***Exhibit B***. Railroad Flagger/EIC Force Account

reimbursement packages shall demonstrate the use of a UPRR, BNSF, and/or a Concessionaire EIC/Flagger for the purpose of installing the Pedestrian Treatment Elements, including but not limited to, County or Contractor signed inspection daily logs and/or reports with a record of hours logged to perform and complete the Pedestrian Treatment Elements.

b. RTD Obligations.

i. The RTD shall:

(i) Execute any access agreements into RTD ROW necessary for the completion of the ADCO Lowell Project matching into the roadway and sidewalk improvements previously constructed by the Concessionaire.

(ii) Deliver the materials for the Pedestrian Treatment Elements to a location selected by the County and the Contractor. RTD and its Concessionaire moved and located the material to the KIK Facility because the ADCO Lowell Project site does not have a laydown area available to store the material. RTD will coordinate with the County's Contractor for the Contractor's pickup of material at the KIK Facility as shown on the delivery report provided by RTD and its Concessionaire. A materials inventory list is included in ***Exhibit A*** of this IGA.

(iii) Coordinate with the County and the Contractor on EIC or flagging requirements to support the ADCO Lowell Blvd Project.

(iv) Coordinate track usage permit applications and attend pre-construction and other construction meetings related to the Contractor's construction activities and means and methods.

(v) Review, respond and/or approve any requests for information and construction submittals.

(vi) Perform periodical oversight inspections and attend construction progress meetings.

(vii) Attend completion and punch list walks. Upon completion of the aforementioned walks for the Pedestrian Treatment Elements, provide written final acceptance to enter into the two (2) year warranty period for operation. Concessionaire will begin operation and maintenance of the Pedestrian Treatment Elements upon final

acceptance as described in an agreement between RTD and the County.

(viii) As an interested party to the PUC Decision, review and comment on the County's proposed PUC filings.

(ix) Provided the ADCO Lowell Project has been completed and accepted by RTD and the Concessionaire in compliance with drawings, specifications and other requirements such as the PUC Decision, pay the County amounts owed for Capital Improvement costs and Railroad Flagger/EIC Force Account invoices pursuant to ***Exhibit B*** within 30 days' of RTD's receipt of the County's reimbursement request package(s) pending verification of a complete reimbursement package.

c. The Parties agree to execute any additional documents or take any additional action that is necessary to carry out the intent of this IGA.

d. The Parties agree to enter into and execute an operations and maintenance agreement to describe the Parties' responsibilities for operating and maintaining certain infrastructure within the RTD/UPRR/BNSF Right-of-Way.

e. The "**RTD/DTO Third Party Project Committee**" consists of RTD representatives, Michael Millage, Senior Manager, Commuter Rail Contract Services and Fabian Testa, Manager, Infrastructure, Systems, & MOW; and DTO representatives, Kelly Abaray, Engineering Program Manager and Aaron Kiehl, Track Usage and Logistics Coordinator.

f. Initially, the "**RTD Project Liaison**" is Michael Millage and the "**County Project Liaison**" is David Rausch, and collectively, the "**Project Liaisons**."

4. **Disputes**. Disputes will be initially resolved between the Project Liaisons. If the respective Project Liaisons are unable to resolve the dispute, they will document the basis for dispute, either independently or together, and forward such information to senior management in accordance with the following escalation process: (i) RTD's Project Manager/Director and the Adams County Capital Improvements Program Manager (ii) RTD's Assistant General Manager, Capital Programs and the Adams County Public Works Director, and (iii) RTD's General Manager and the County's Administrator.

5. **Liability**. As between the Parties, without waiving any of the rights and protections provided under the Colorado Governmental Immunity Act, Sections 24-10-101 to 120, C.R.S., each Party hereto is responsible for its own negligence in the performance of this IGA. If either Party is given notice of claim or suit against or involving the other arising from the implementation of this IGA or design or construction of the Project, it agrees to give the other Parties prompt written notice of such claim or suit. The Parties shall consider any pre-construction photos and documentation of conditions existing prior to start of work within the RTD/UPRR/BNSF Right-of-Way.

6. **Notice**. All notices, consents, or other instruments or communications provided for under this Agreement will be in writing, signed by the party giving the same, and will be deemed properly given and received (a) when actually delivered and received personally, by messenger service, or by fax or telecopy delivery; (b) on the next business day after deposit for delivery in an overnight courier service such as FedEx; or (c) three business days after deposit in the United States mail, by registered or certified mail with return receipt requested. All such notices or other instruments will be transmitted with delivery or postage charges prepaid, addressed to the party at the address below for that party or to such other address as such party may designate by written notice to the other parties:

To the County: Rene Valdez
Capital Improvements Program Manager
Public Works Department for Adams County
4430 South Adams County Parkway, Suite W2000B
Brighten, CO 80601
Email: rvaldez@adcogov.org
Phone: 720-523-6961

With a copy to: David Rausch
Adams County Project Liaison
Public Works Department for Adams County
4430 South Adams County Parkway, Suite W2000B
Brighten, CO 80601
Email: drausch@adcogov.org
Phone: 720-523-6840

RTD: Michael Millage
Senior Manager, Commuter Rail Contracted Services
RTD Project Director of Operations and Maintenance
Regional Transportation District
711 West 31st Avenue, Suite 30, 711-30
Denver, CO 80202
Email: Michael.Millage@rtd-denver.com

With a copy to: Joe Christie
EAGLE P3 Project Director of D/B
Regional Transportation District
1560 Broadway, Suite 700, FAS-72
Denver, CO 80202
Email: Joe.Christie@rtd-denver.com
Phone: 303-299-6989

All notices, demands, requests or other communications shall be effective upon such personal delivery or one (1) business day after being deposited with FedEx or other nationally recognized overnight air courier service, upon electronic confirmation email transmission, or three (3) business days after deposit in the United States mail. By giving the other party hereto at least ten (10) days' written notice thereof in accordance with the provisions hereof, each of the Parties shall have the right from time to time to change its address.

7. **Amendment**. This IGA may be amended from time to time by agreement among the Parties hereto, provided, however, that no amendment, modification, alteration, or extension of the terms or provisions hereof shall not be binding upon any Party unless the same is in writing and duly executed by all Parties hereto.

8. **Appropriation.** Pursuant to section 29-1-110, C.R.S., any financial obligations of the Parties contained herein that are payable after the current fiscal year are contingent upon funds for that purpose being appropriated, budgeted, and otherwise made available on an annual basis.

9. **Colorado Law**. The laws of the State of Colorado shall govern this IGA. Venue for any action hereunder shall be in the District Court, Adams County, State of Colorado and the Parties waive any right to remove any action to any other court, whether state or federal.

10. **Separate Entities**. The Parties enter into this IGA as separate, independent governmental entities and shall maintain such status throughout.

11. **No Third-Party Beneficiaries**. The enforcement of the terms and conditions of this IGA and all rights of action relating to such enforcement, shall be strictly reserved to the Parties, and nothing contained in this IGA shall give or allow any such claim or right of action by any other or third person under such IGA. Any beneficiary of the terms and conditions of this IGA are not intended beneficiaries but are incidental beneficiaries only.

12. **Entirety.** This IGA merges and supersedes all prior negotiations, representations and agreements between the Parties hereto relating to the subject matter hereof and constitutes the entire agreement between the Parties concerning the subject matter hereof.

13. **No Waiver**. A waiver by any Party to this IGA of the breach of any term or provision of this IGA shall not operate or be construed as a waiver of any subsequent breach by either Party.

14. **Merger**. This IGA represents the entire agreement between the Parties with respect to the subject matter hereof and all prior agreements, understandings or negotiations will be deemed merged herein. No representations, warranties, promises or agreements, express or implied, will exist between the Parties, except as stated herein.

15. **Authority**. The Parties represent that each has taken all actions that are necessary or that are required by its procedures, bylaws, or applicable law to legally authorize the undersigned signatories to execute this IGA on behalf of the Parties and to bind the Parties to its terms.

16. **Severability**. To the extent that this IGA may be executed and performance of the obligations of the Parties may be accomplished within the intent of the IGA, the terms of the IGA are severable, and should any term or provision hereof be declared invalid or become inoperative

for any reason, such invalidity or failure will not affect the validity of any other terms or provision hereof.

17. **Paragraph Headings**. The captions and headings set forth in this IGA are for convenience of reference only and will not be construed so as to define or limit its terms and provisions.

18. **Counterparts**. This IGA may be executed in counterparts. Signatures on separate originals will constitute and be of the same effect as signatures on the same original. Electronic and faxed signatures will constitute original signatures.

[SIGNATURE PAGE[S] FOLLOW]

IN WITNESS WHEREOF, the Parties hereto have executed this IGA on the date first set forth above.

ADAMS COUNTY, Colorado, a county of the State of Colorado

By: _____
Name: _____
Title: _____
Date: _____

ATTEST: _____
By: _____
Name: _____
Title: _____
Date: _____

THE REGIONAL TRANSPORTATION DISTRICT, a political subdivision of the State of Colorado

By: _____
Henry J. Stopplecamp, P.E.
Assistant General Manager, Capital Programs

Date: _____

APPROVED AS TO LEGAL FORM:

By: _____
Aimée Beckwith
Associate General Counsel
Date: _____

Exhibit A

ADCO Lowell Project Addendum Package

Adams County Lowell Boulevard Improvements Project

Project No. IMP2013-00009

Addendum Scope of Work Located at UPRR Moffat Subdivision Lowell Crossing and RTD Gold Line Lowell Crossing

Jalisco International, Inc Bid Addendum #1

Addendum Relative to the Completion of Remaining RTD/DTP Responsibilities in Accordance to:

- **ADCO CPUC Doc. No. 14A-0894R**
- **Decision No. R15-0195**

Index of Appendices

Appendix A Work Completed by Denver Transit Partners (DTP)

Appendix B Jalisco Scope of Work under Addendum No. 1

Appendix C Scope of Work Drawings (mark up of DTP and ADCO drawings)

- ADCO CPUC Exhibit B Diagnostics Exhibit – Jalisco Add #1 SoW for Items not Completed by DTP
- ADCO RD-8 and UT-2 – Redlines showing Jalisco Add #1 SoW for Items not Completed by DTP
- DTP CI-002; CP-005; and KS-003 - Redlines showing Jalisco Add #1 SoW for Items not Completed by DTP

Appendix D DTP Eagle Fence and Gate Specifications

Appendix E DTP Shop Drawings w/ Parts Quantity and Material Inventory List

APPENDIX A

WORK COMPLETED BY DENVER TRANSIT PARTNERS (DTP) IN ACCORDANCE TO CPUC DOCKET NO. 14A-0894R/DECISION NO. R15-0195

Section 8 ADCO CPUC Docket No. 14A-0894R – Proposed Installation of Crossing (RTD/DTP Responsibilities)

1) RTD/DTP will be responsible for the installation of pedestrian treatment elements within RTD right-of-way.
2) RTD/DTP will be responsible for the installation of all pedestrian swing gates/signage/pedestrian channelization fence including those outside the RTD right-of-way.
3) RTD/DTP will be responsible for installation of the track work, long ties and surface panels needed for the roadway widening and new sidewalks within RTD right-of-way.
4) RTD/DTP will be responsible for construction of sidewalk and roadway improvements within RTD right-of-way.
5) RTD/DTP will be responsible for all installation of another train coming blank-out signs, including those outside the RTD right-of-way.

Infrastructure/Pedestrian Treatment Elements Completed by DTP

During final completion of the Eagle Gold Line Design-Build Phase in 2016, when Denver Transit Constructor (DTC), a contractor to DTP, was still performing work, they were able to complete the follow construction and installation of pedestrian treatment elements per ADCO CPUC Docket No. 14A-0894R. Some items DTC were unable to finish due to the County Lowell Blvd project and grading within the railroad crossing not started/completed, and project agreements with freight railroad/private property owners not started/completed. Incomplete items will be subject to Appendix B, Jalisco Scope of Work.

List of Infrastructure/Pedestrian Treatment Elements Completed per ADCO CPUC Docket No. 14A-0894R

- RTD Gold Line Commuter Rail track work installed *(TASK FULLY COMPLETE)*
- RTD Gold Line Commuter Rail surface panels (track panels) installed across roadway and sidewalk *(TASK FULLY COMPLETE)*
- RTD Gold Line Commuter Rail long ties installed across roadway and sidewalk *(TASK FULLY COMPLETE)*
- RTD/UPRR rail/vehicle interface circuits/loop detection installed across entire railroad crossing from vehicle crossing gates to vehicle crossing gates and between the different UPRR/BNSF/RTD tracks. *(TASK FULLY COMPLETE)* This infrastructure will need to be protected in place by ADCO/Jalisco to retain operational rail safety protection system
- Lowell Blvd roadway and curb/gutter widening improvements matching County typical section constructed to the RTD right-of-way limits *(TASK FULLY COMPLETE)*

- Lowell Blvd 10 foot (western) sidewalk matching County typical section constructed to the RTD right-of-way limits *(TASK FULLY COMPLETE)*
- Lowell Blvd 5 foot (eastern) sidewalk matching County typical section constructed to the RTD right-of-way limits *(TASK FULLY COMPLETE)*
- Pedestrian swing gates/foundations/posts adjacent to the RTD Gold Line Commuter Rail trackway system/right-of-way installed/assembled. *(PARTIALLY COMPLETE)* This includes installation of “Push to Open” and “Pull to Open” signs on gates
    - Double gate on NW quadrant.
    - Double gate on SW quadrant
    - Single gate on NE quadrant
    - Single gate on SE quadrant
- Pedestrian channelization fence (42 inch chain link) adjacent to the RTD Gold Line Commuter Rail trackway system/right-of-way *(PARTIALLY COMPLETE)*
    - NW/NE quadrant on track corridor side installed as part of the Commuter Rail perimeter fencing
- Tactile warning strip adjacent to the RTD Gold Line Commuter Rail trackway system/right-of-way installed *(PARTIALLY COMPLETE)*
    - NE quadrant complete
- Back-to-Back Another Train Coming blank-out signs as part of railroad crossing activation system *(TASK FULLY COMPLETE)*

APPENDIX B

JALISCO SCOPE OF WORK UNDER ADDENDUM No. 1

List of Infrastructure/Pedestrian Treatment Elements to be Completed by Jalisco per ADCO CPUC Docket No. 14A-0894R

- Install Five (5) 2 foot X 5 foot brick red truncated domes (Tactile Warning Strips) at RTD CRT Crossing. 2 @ NW double gate; 2 @ SW double gate; 1 @ SE single gate.
  - 1 @ NE single gate already installed; 6 procured by DTP and will be provided/delivered to Jalisco
  - *No material procurement required by Jalisco*
- Install Eight (8) pedestrian "Stop Here When Lights are Flashing" signs. 4 left hand and 4 right hand. See Gold Line Sheet KS-003.
  - 8 procured (4 left and 4 right) by DTP and will be provided/delivered to Jalisco
  - *No material procurement required by Jalisco*
- Install Two (2) double pedestrian swing gates/foundations/posts adjacent to the UPRR crossing adjacent to UPRR and BNSF tracks along the Lowell Blvd 10 foot (western) sidewalk. Install parallel to nearest track at a distance of 15 foot minimum from centerline of track.
  - 2 procured by DTP and will be provided/delivered to Jalisco
  - *No material procurement required by Jalisco*
- Install Two (2) single pedestrian swing gates/foundations/posts adjacent to the UPRR crossing adjacent to UPRR and BNSF tracks along the Lowell Blvd 5 foot (eastern) sidewalk. Install parallel to nearest track at a distance of 15 foot minimum from centerline of track.
  - 2 procured by DTP and will be provided/delivered to Jalisco
  - *No material procurement required by Jalisco*
- Install approximately 84 feet of 42 inch chain link pedestrian channelization fence on both sides of pedestrian gates/sidewalks. 14 locations at 6 feet per location.
  - *Approximately 84 feet of 42 inch chain link fence to be procured by Jalisco*
- Adjustment of/removal of portion of old UPRR RR crossing signal gate mechanism foundation
  - Jalisco to cut old UPRR foundation down 2 feet below new sidewalk finish grade

Notes:

1) ***Installation of infrastructure/pedestrian treatment elements will be similar to those installed at the RTD Gold Line/UPRR Moffat Subdivision Tennyson Street Crossing west of Lowell Boulevard Crossing***.
2) ***All materials with the exception of 42 inch chain link pedestrian channelization fence have been procured by DTP.***
3) ***All materials procured by DTP will be delivered to Jalisco laydown/storage site. Shop Drawings and Material Inventory List are included as Appendix E to this Addendum Package.***
4) ***Sidewalk landings on pull side of all pedestrian gate shall meet ADA requirements of less than 2% grade for a minimum of 4 feet.***

APPENDIX C

SCOPE OF WORK DRAWINGS (MARK UP OF DTP AND ADCO DRAWINGS)

- **ADCO CPUC EXHIBIT B DIAGNOSTICS EXHIBIT – JALISCO ADD #1 SOW FOR ITEMS NOT COMPLETED BY DTP**

- **ADCO RD-8 AND UT-2 – REDLINES SHOWING JALISCO ADD #1 SOW FOR ITEMS NOT COMPLETED BY DTP**

- **DTP CI-002; CP-005; AND KS-003 - REDLINES SHOWING JALISCO ADD #1 SOW FOR ITEMS NOT COMPLETED BY DTP**

JALISCO SCOPE OF WORK PED TREATMENT TO BE COMPLETED AS PART OF ADCO PROJECT

THIS EXHIBIT WAS PROVIDED BY RTD AS PART OF THE GOLD LINE PROJECT TO PROVIDE AN OVERVIEW OF PROPOSED SIGNING AND STRIPING THAT INCORPORATES BOTH THE GOLD LINE PROJECT (DOCKET 14A-0124R) AND ADAMS COUNTY WIDENING PROJECT.

ITEMS MISSING FROM LOCATION:
1) PEDESTRIAN SIGN
2) PEDESTRIAN CHANNELIZATION FENCE
3) DOUBLE PED SWING GATE

ITEMS MISSING FROM LOCATION:
1) PEDESTRIAN SIGN
2) PEDESTRIAN CHANNELIZATION FENCE
3) DOUBLE PED SWING GATE

ITEMS MISSING FROM LOCATION:
1) PEDESTRIAN SIGN
2) PEDESTRIAN CHANNELIZATION FENCE
3) TACTILE WARNING STRIP

42 INCH CHAIN LINK PEDESTRIAN CHANNELIZATION FENCE

ITEMS MISSING FROM LOCATION:
1) PEDESTRIAN SIGN
2) TACTILE WARNING STRIP

ITEMS TO BE ADJUSTED AT LOCATION:
1) CUT DOWN OF OLD UPRR RR CROSSING SIGNAL GATE MECHANISM FOUNDATION
* TWO (2) FOOT BELOW SIDEWALK FINISH GRADE

42 INCH CHAIN LINK PEDESTRIAN CHANNELIZATION FENCE

ITEMS MISSING FROM LOCATION:
1) PEDESTRIAN SIGN
2) PEDESTRIAN CHANNELIZATION FENCE
3) SINGLE PED SWING GATE

ITEMS MISSING FROM LOCATION:
1) PEDESTRIAN SIGN
2) PEDESTRIAN CHANNELIZATION FENCE
3) TACTILE WARNING STRIP

ITEMS MISSING FROM LOCATION:
1) PEDESTRIAN SIGN

811. Know what's below. Call before you dig.

See Also DTP sheets CP-005; CI-002; KS-003 (Doc Exhibit B (DE-002))

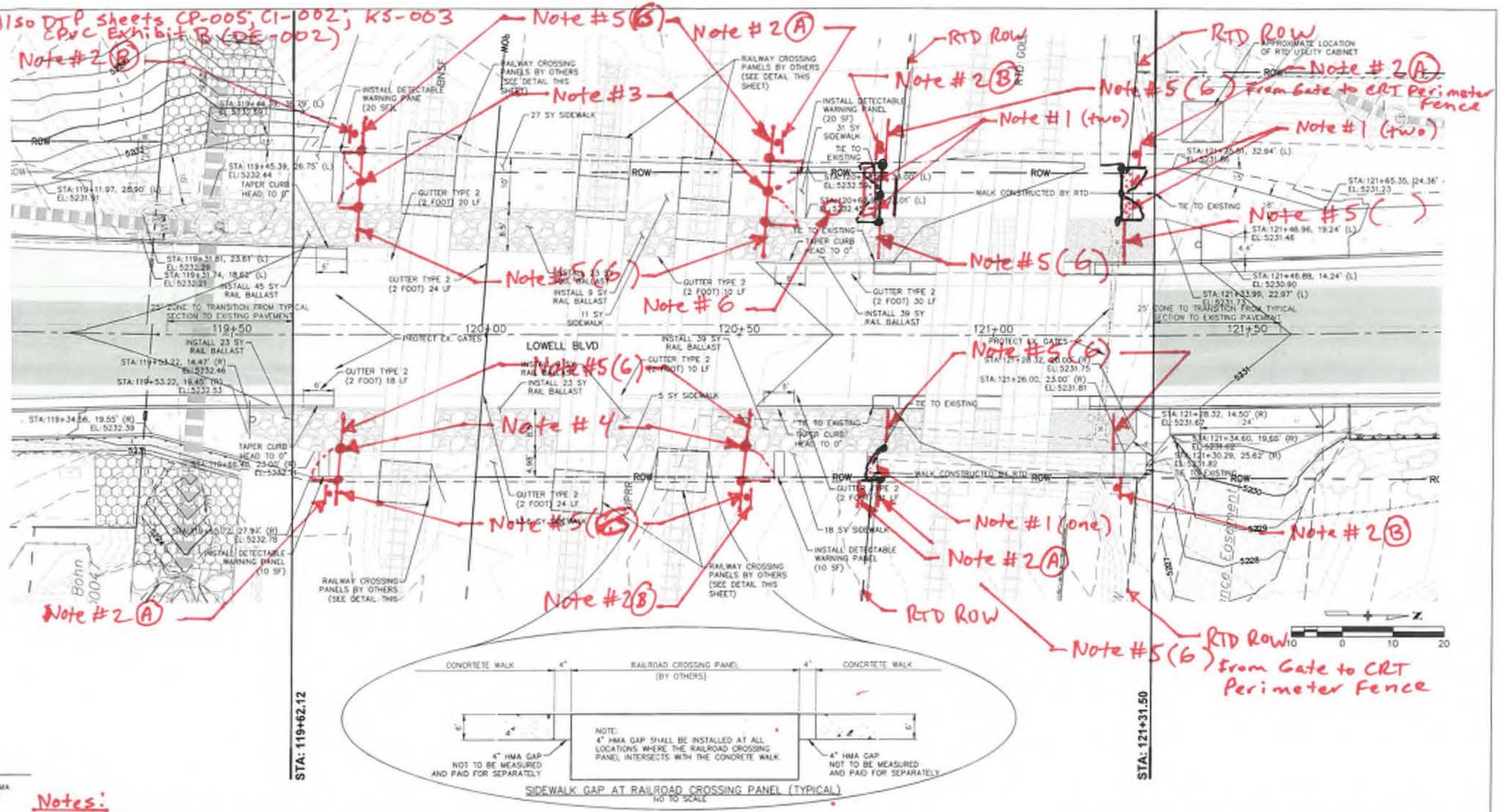

LEGEND

- FULL DEPTH HMA
- HMA OVERLAY
- HMA PATCH
- CONCRETE WALK
- RAIL BALLAST
- SOIL RIPRAP

Notes:

1) Install 2ft X 5ft brick red truncated domes (Tactile Warning Strips) at RTD CRT Crossing
2) Install pedestrian "Stop Here When Lights are Flashing" signs
   (A) - ← Rt Hand ; (B) - → Lt Hand
3) Install double pedestrian swing gates/foundation/posts — (15 ft min from nearest track)
4) Install single pedestrian swing gates/foundation/posts
5) Install pedestrian channelization fence (X feet) (42 inch Chain Link) - ℄ Post to ℄ Post - 6 foot
6) Removal of (cut down) portion of old UPRR RR crossing signal/gate mechanism foundation

(7) Sidewalk landing on pull side of pedestrian gate to meet ADA requirements of less than 2% for minimum 4 feet

Computer File Information				Index of Revisions		
Designed By:	GP	Drawn By:	JMP	(R-)		
Creation Date:	12-17-2011	Initials:	DKIM	(R-)		
Last Modification Date:	12-15-2017	Initials:	JMP	(R-)		
Drawing File Name:	.../SHEET/0320PH01-C11X-CST.DWG			(R-)		
AutoCAD Version:	C3D 2014	Units:	English	(R-19)		

PREPARED FOR: ADAMS COUNTY COLORADO, 4430 S. ADAMS COUNTY PARKWAY, BRIGHTON, COLORADO 80601
CONTACT: JENNIFER SHI, PE

PREPARED BY: HUITT-ZOLLARS, 4582 S. Ulster St. Ste 240, Denver, CO 80237, Phone (303) 740-7325, Fax (303) 224-9907
CONTACT: GERALD PRUSIK, PE

LOWELL BOULEVARD IMPROVEMENTS
CLEAR CREEK TO W. 62ND AVENUE

RAILROAD CROSSING DETAIL

Project No. / Code	
ADAMS COUNTY: IMP2013-00009 HUITT-ZOLLARS: 16-0320-01	
Sheet Name	RD-8
Sheet Number	65

PRINTSTAMP: 2018.01.03 04:11:19 PM

811. Know what's below. Call before you dig.

See Also DTP Sheets CP-005; CI-002; KS-003
CPUC Exhibit B (DE-002)

STA 112+00 LOWELL HCL — STA 118+00 LOWELL HCL

MATCH LINE

XCEL OHE RESET POLE BY OWNERS
DISCONNECT GAS SERVICE BY OWNER
PH-13
PH-14
RESET GAS SERVICE BY OWNER
RESET GAS SERVICE BY OWNER
ADJUST FO BY OWNER
CENTURYLINK OH TELE RESET POLE BY OWNER
PH-15
PH-16
PH-19
RESET WATERLINE
ADJUST VALVE BOX (2)
CENTURYLINK OH RESET POLE BY OWNERS
PROP OH TV AND TELE
PROP OH TV AND TELE
PROP OH TELE
PROP OH TELE
ROW
112+50 113+00 113+50 114+00 114+50 115+00 115+50 116+00 116+50 117+00 117+50 118
LOWELL BLVD.
REMOVE BOLLARD (2)
CENTURYLINK OHT UTILITY POLE PROTECT IN PLACE
ADJUST VALVE BOX (2)
PH-17
RESET WATERLINE
ADJUST FO BY OWNER
PH-18
CENTURYLINK FO ADJUST MH BY OWNER
XCEL OHE, COMCAST OHTV, CENTURY LINK OHT UTILITY POLE PROTECT IN PLACE
ADJUST FIRE HYDRANT
XCEL OHE, COMCAST OHTV, CENTURY LINK OHT UTILITY POLE PROTECT IN PLACE
XCEL OHE, COMCAST OHTV UTILITY POLE PROTECT IN PLACE
WATER METER PROTECT IN PLACE
CENTURYLINK OHT UTILITY POLE PROTECT IN PLACE
Parcel 15
Parcel 16
Parcel 17 Eddie & Carol Bohn

Note #5 (Var) From Gate to CRT Perimeter Fence

NOTE: PROTECT IN PLACE ALL UTILITIES TO REMAIN.

20 0 20 40

City Of Westminster PN 0182507400002

*** For note information See ADCO Sheet RD-8

STA 118+00 LOWELL HCL — STA 124+00 LOWELL HCL

RTD ROW
Note #2 (B)
RTD ROW
Note #2 (A)
Note #5 (6)
Note #1 (two)
Note #2 (A)
Note #1 (two)
Note #2 (B)
Note #3
Note #5 (6)
Note #6
Note #5 (6)
Note #5 (6)
Note #4
Note #5 (6)
Note #2 (B)
Note #5 (6)
Note #2 (B)
Note #1 (one)
Note #2 (A)
Note #5 (Var) From Gate to CRT Perimeter Fence
Note #2 (A)
RTD ROW
RTD ROW

RESET WATER SERVICE
PH-20
PH-21
RESET GAS SERVICE BY OWNER
PH-22
PH-23
CENTURYLINK RESET PEDESTAL BY OWNER
ZAYO FO ADJUST FO BY OWNER
RESET UPRR ELEC METER BY OWNER
BNSF
UPRR
ADJUST UPRR ELEC PULL BOX BY OWNER
RTD GOLD RAIL LINE
PH-25
XCEL UGE ADJUST UGE BY OWNER
W-06
E-09
ROW
118+50 119+00 119+50 120+00 120+50 121+00 121+50 122+00 122+50 123+00 123+50 124
CENTURYLINK FO ADJUST MH BY OWNER
RESET FO BY OWNER
LOWELL BLVD.
ZAYO FO ADJUST MH BY OWNER
ADJUST VALVE BOX
ADJUST FIRE HYDRANT
XCEL OHE, COMCAST OHTV UTILITY POLE PROTECT IN PLACE
CENTURYLINK OHT UTILITY POLE PROTECT IN PLACE
PH-24
ADJUST UPRR ELEC PULL BOX BY OWNER
XCEL OHE, COMCAST OHTV UTILITY POLE PROTECT IN PLACE – THE CONTRACTOR SHALL EXERCISE EXTREME CAUTION WORKING IN THE VACINITY OF THIS POWER POLE, AND SHALL COORDINATE WITH XCEL ENERGY PRIOR TO AND THROUGHOUT CULVERT PLACEMENT. XCEL ENERGY TO RELOCATE IF NECESSARY
XCEL OHE OTHER POLE PROTECT IN PLACE
PH-26
XCEL UGE ADJUST UGE BY OWNER
COMCAST OHTV UTILITY POLE PROTECT IN PLACE
Parcel 18 Eddie & Carol Bohn PN 0182508300047
Parcel 19 Lobo Limited Liability Company PN 0182508211002
Parcel 20 Eddie

MATCH LINE

Computer File Information			
Designed By:	GP	Drawn By:	JMP
Creation Date:	12-17-2011	Initials:	JMP
Last Modification Date:	12-15-2017	Initials:	DKIM
Drawing File Name:	.../SHEET/0320PH01-C70X-CUT.DWG		
AutoCAD Version:	C3D 2014	Units:	English

Index of Revisions

R-	
R-	
R-	
R-	
R-	

PREPARED FOR: ADAMS COUNTY, 4430 S. ADAMS COUNTY PARKWAY, BRIGHTON, COLORADO 80601, CONTACT: JENNIFER SHI, PE

PREPARED BY: HUITT-ZOLLARS, 4582 S. Ulster St. Ste 240, Denver, CO 80237, Phone (303) 740-7325, Fax (303) 224-9997, CONTACT: GERALD PRUSIK, PE

LOWELL BOULEVARD IMPROVEMENTS
CLEAR CREEK TO W. 62ND AVENUE

UTILITY PLAN

Project No. / Code: ADAMS COUNTY: IMP2013-00009; HUITT-ZOLLARS: 16-0320-01

Sheet Name: UT-2

Sheet Number: 95

NOTES:
1. SEE CIVIL STANDARD DETAILS.
2. STATION AND OFFSET BASED ON LOWELL BLVD ALIGNMENT UNLESS LABELED OTHERWISE.
3. APPROVAL FOR SIGNAL HOUSE AND RETAINING WALL SHOWN OUTSIDE OF RTD ROW TO BE INCLUDED IN THE RTD AND ADAMS COUNTY IGA.

42' CHAIN LINK FENCE			
BEGIN		END	
121+20.68	46.3' LT	121+19.77	34.4' LT
121+19.77	34.4' LT	121+27.72	34.4' LT
121+12.52	27.4' RT	121+28.82	27.4' RT

PEDESTRIAN SWING GATE			
STATION	OFFSET	SWING	HINGE
119+66.69	24.5' RT	SOUTH	LEFT
119+70.61	29.0' LT	SOUTH	DOUBLE
120+56.64	24.5' RT	NORTH	RIGHT
120+60.55	29.0' LT	NORTH	DOUBLE
120+72.55	24.5' RT	SOUTH	LEFT
120+76.88	29.0' LT	SOUTH	DOUBLE
121+23.41	24.5' RT	NORTH	RIGHT
121+27.72	29.0' LT	NORTH	DOUBLE

See Also ADCO Sheets RD-8 & UT-2
CPUC Exhibit B (DE-002)

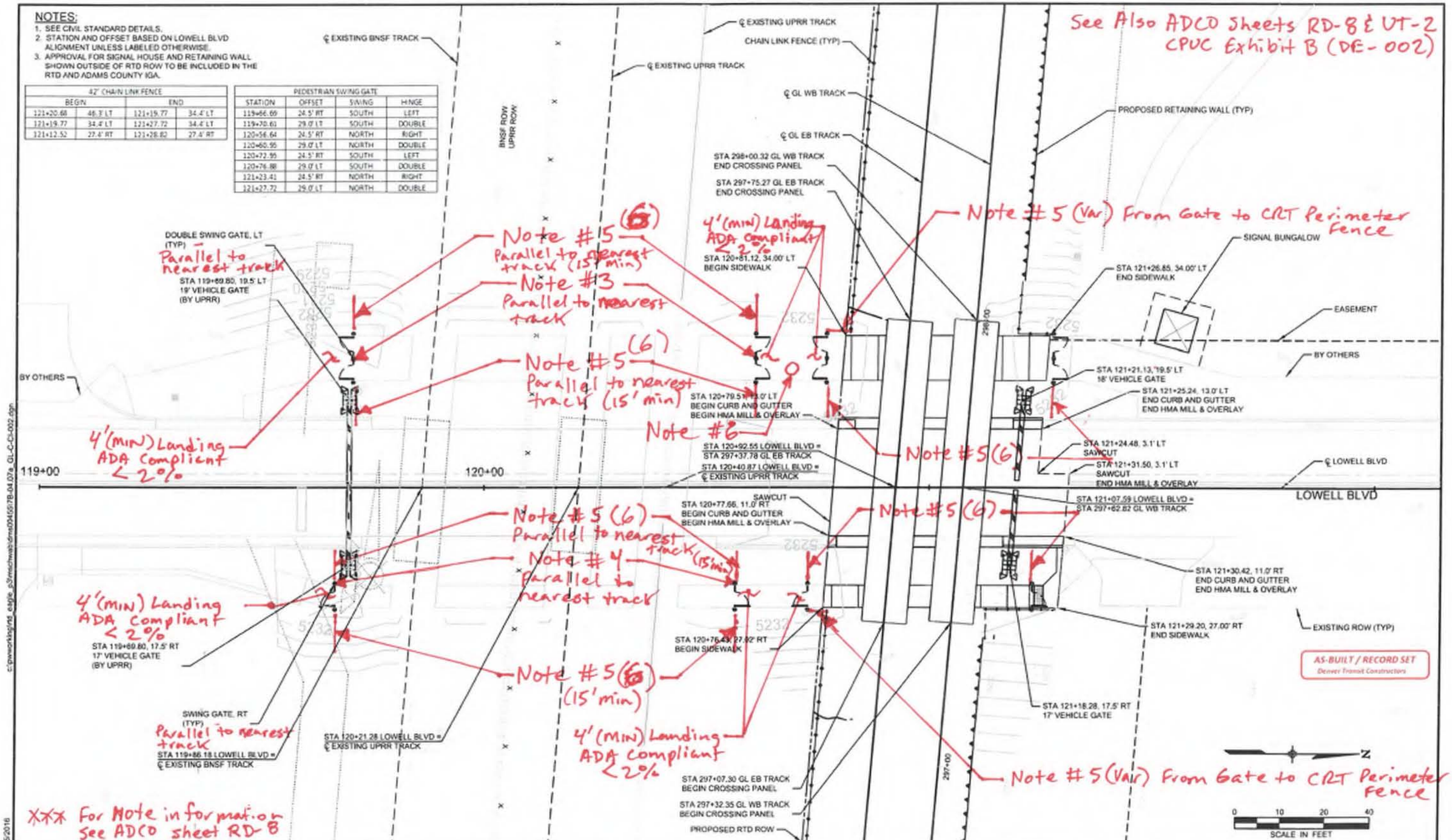

*** For More information see ADCO sheet RD-8

NO.	REVISIONS	BY	DATE
AB	AS-BUILT DRAWING SET, CDRL #7B-04.07a	MS	08/14/16
2	DCN-FHDR-00912, REVISED IN ENTIRETY	RGR	02/24/16
1	DCN-FHDR-00259, REVISED IN ENTIRETY	MTF	03/19/14
0	ISSUED FOR CONSTRUCTION, CDRL #7B-04.07a, REV 0	MTF	06/08/12

DESIGNED BY: N/A DATE: N/A
DRAWN BY: N/A DATE: N/A
CHECKED BY: N/A DATE: N/A
APPROVED BY: N/A DATE: N/A

FASTRACKS eagle P3 FLUOR HDR DENVER TRANSIT PARTNERS

GOLD LINE

LOWELL BOULEVARD INTERSECTION DETAIL

SHEET REFERENCE NUMBER: CI-002

USER: MSCHWAB 8/15/2016

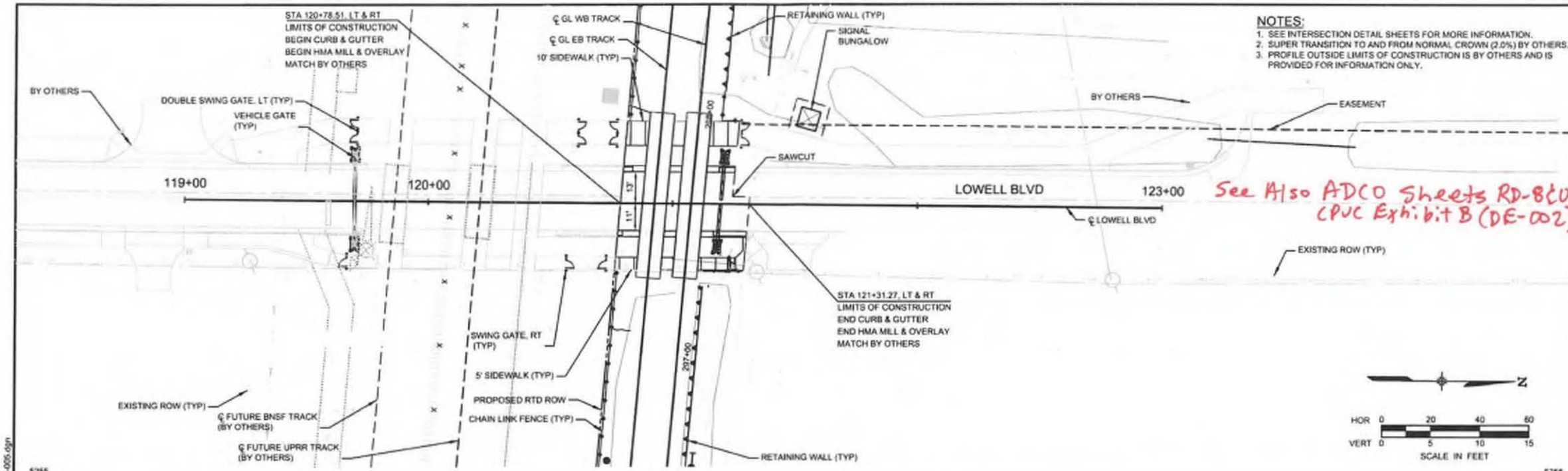

See Also ADCO Sheets RD-8 & UT-2
CPUC Exhibit B (DE-002)

NOTES:
1. SEE INTERSECTION DETAIL SHEETS FOR MORE INFORMATION.
2. SUPER TRANSITION TO AND FROM NORMAL CROWN (2.0%) BY OTHERS.
3. PROFILE OUTSIDE LIMITS OF CONSTRUCTION IS BY OTHERS AND IS PROVIDED FOR INFORMATION ONLY.

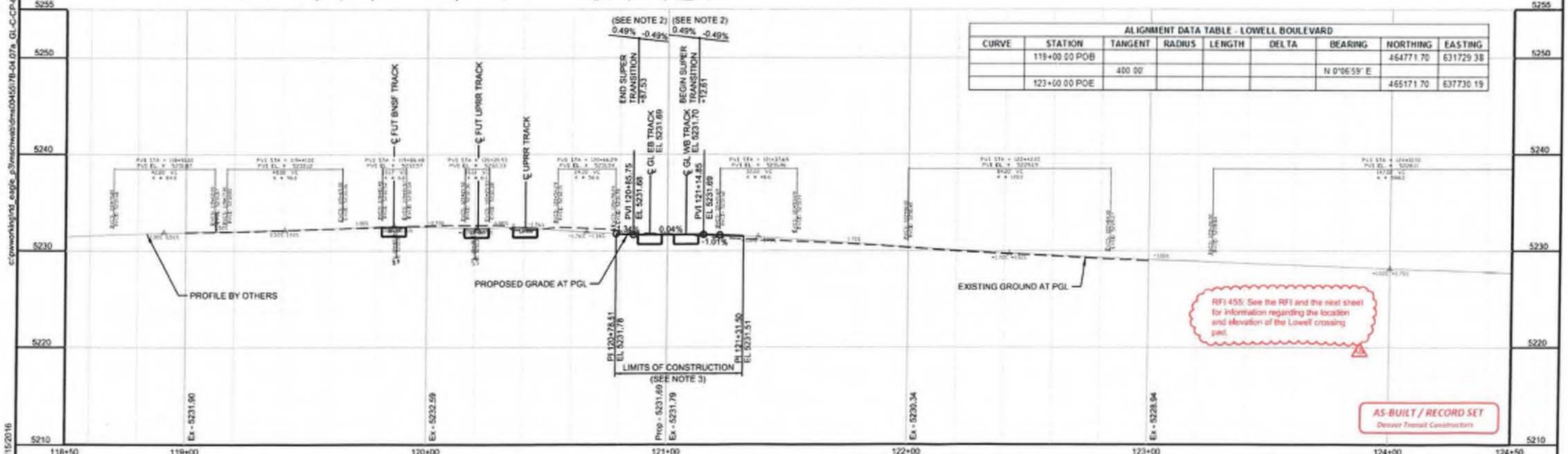

RFI 455: See the RFI and the next sheet for information regarding the location and elevation of the Lowell crossing pad.

AS-BUILT / RECORD SET
Denver Transit Constructors

ALIGNMENT DATA TABLE - LOWELL BOULEVARD								
CURVE	STATION	TANGENT	RADIUS	LENGTH	DELTA	BEARING	NORTHING	EASTING
	119+00.00 POB						464771.70	631729.38
		400.00'				N 0°06'59" E		
	123+00.00 POE						465171.70	637730.19

NO.	REVISIONS	BY	DATE
AB	AS-BUILT DRAWING SET, CDRL #7B-04.07a	MS	08/14/16
2	DCN-FHDR-00912, REVISED IN ENTIRETY	RGR	02/24/16
1	DCN-FHDR-00259, REVISED IN ENTIRETY	MTF	03/19/14
0	ISSUED FOR CONSTRUCTION, CDRL #7B-04.07a, REV 0	MTF	06/08/12

DESIGNED BY: N/A DATE: N/A
DRAWN BY: N/A DATE: N/A
CHECKED BY: N/A DATE: N/A
APPROVED BY: N/A DATE: N/A

FASTRACKS
eagle P3
FLUOR HDR
DENVER TRANSIT PARTNERS

GOLD LINE

LOWELL BOULEVARD
CIVIL PLAN AND PROFILE
LOWELL BOULEVARD STA 119+00.00 TO 123+00.00

SHEET REFERENCE NUMBER:
CP-005

c:\pwworking\d3_eagle_p3\mschwab\dms00455\7B-04.07a_GL-C-CP-005.dgn
8/15/2016
USER: MSCHWAB

See Also ADCO Sheets RD-B & UT-2
CPUC Exhibit B (DE-002)

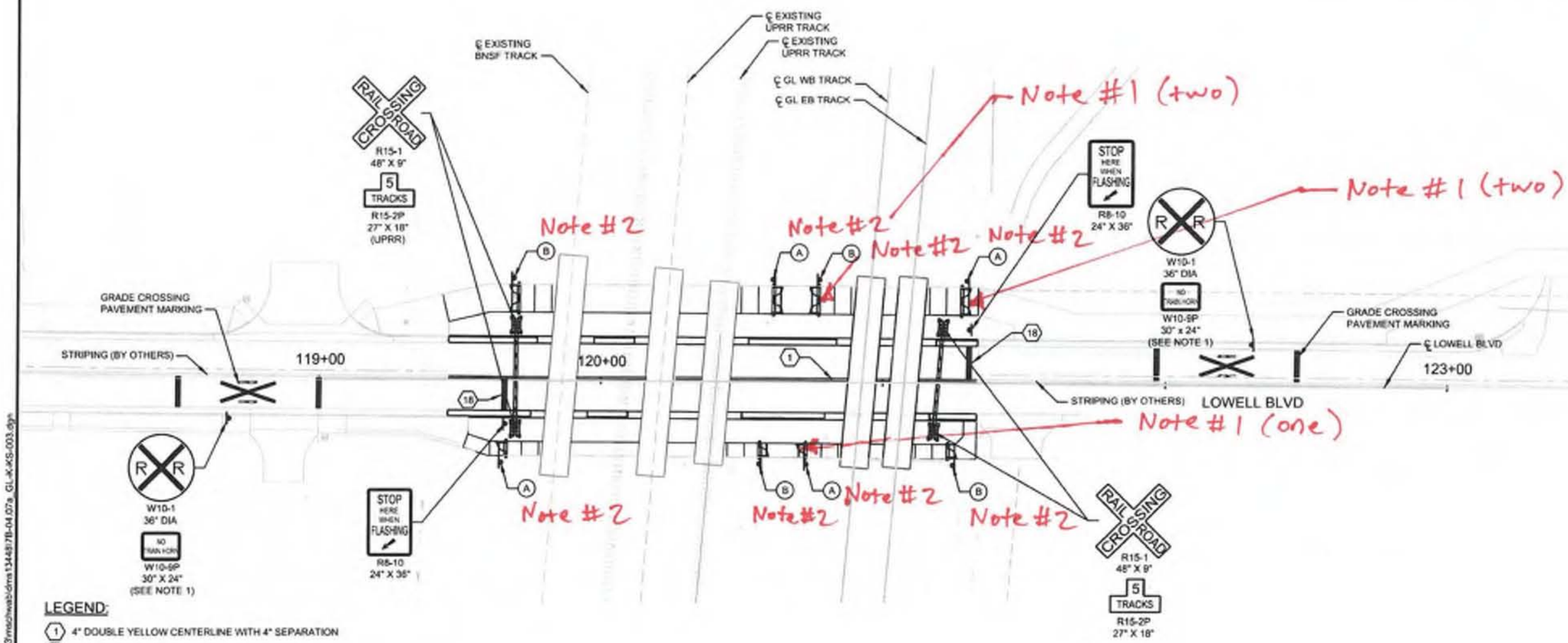

LEGEND:

1. 4" DOUBLE YELLOW CENTERLINE WITH 4" SEPARATION
2. 4" SKIP YELLOW CENTERLINE, 10' LINE, 30' GAP
3. 4" SOLID YELLOW TWO WAY LEFT EDGE LINE
4. 4" SOLID YELLOW WITH 4" SKIP YELLOW, 10' LINE, 30' GAP, AND 4" SEPARATION
5. 4" SKIP WHITE LANE LINE, 10' LINE, 30' GAP
6. 4" SOLID WHITE RIGHT EDGE LINE OR TURN LANE LINE
7. 4" SOLID WHITE 45° DIAGONAL CROSSHATCH AT 15' SPACING
8. 8" SOLID WHITE RIGHT EDGE LINE OR TURN LANE LINE
9. 8" DASHED WHITE LINE, 2' DASHED WITH 4' GAP
10. 4" DASHED WHITE LINE, 3' DASHED WITH 9' GAP
15. 12" WHITE TRAVERSE CROSSWALK LINE
16. 12" X 6' WHITE CROSSWALK BAR
17. 24" X 10' WHITE CROSSWALK BAR
18. 24" WHITE STOP LINE, ONLY WHEN SHOWN ON PLANS
19. PAVEMENT MESSAGES ONLY WHEN SHOWN ON PLANS
20. DASHES THRU INTERSECTION WHEN SHOWN ON PLANS ARE 4' LONG LINES CENTERED IN EACH CROSS STREET TRAFFIC LANE

*** For note information SEE ADCO sheet RD-8

PUSH TO OPEN — PLACED ON ENTRANCE SIDE OF PEDESTRIAN SWING GATE.

PULL TO OPEN — PLACED ON EXIT SIDE OF PEDESTRIAN SWING GATE.

(A) STOP HERE WHEN FLASHING — R8-10a (SPECIAL) 12" X 15"

(B) STOP HERE WHEN FLASHING — R8-10a (SPECIAL) 12" X 15"

NOTES:

1. W10-9P SIGNS SHALL NOT BE INSTALLED PRIOR TO IMPLEMENTATION OF QUIET ZONE. SEE GENERAL NOTES FOR INSTALLATION INSTRUCTIONS.
2. "PUSH TO OPEN" AND "PULL TO OPEN" SIGNS TO BE PLACED ON PEDESTRIAN SWING GATES.

AS-BUILT / RECORD SET
Denver Transit Constructors

N

0 20 40 60
SCALE IN FEET

NO.	REVISIONS	BY	DATE
AB	AS-BUILT DRAWING SET. CDRL #7B-04.07a	MS	08/14/16
2	DCN-FHDR-00912, SHEET REVISED IN ENTIRETY	MAB	02/24/16
1	DCN-FHDR-00259, REVISED IN ENTIRETY	JMS	03/20/14
0	ISSUED FOR CONSTRUCTION. CDRL #7B-04.07a. REV 0	JMS	06/08/12

DESIGNED BY: N/A DATE: N/A
DRAWN BY: N/A DATE: N/A
CHECKED BY: N/A DATE: N/A
APPROVED BY: N/A DATE: N/A

FASTRACKS FLUOR HDR eagle P3 DENVER TRANSIT PARTNERS

GOLD LINE

LOWELL BOULEVARD
SIGNING AND STRIPING
LOWELL BLVD STA 119+00 TO STA 123+00

SHEET REFERENCE NUMBER: KS-003

USER: MSCHWAB 8/15/2016 C:\pwworking\15_eagle_p3\mschwab\dms13448\7B-04.07a_GL-K-KS-003.dgn

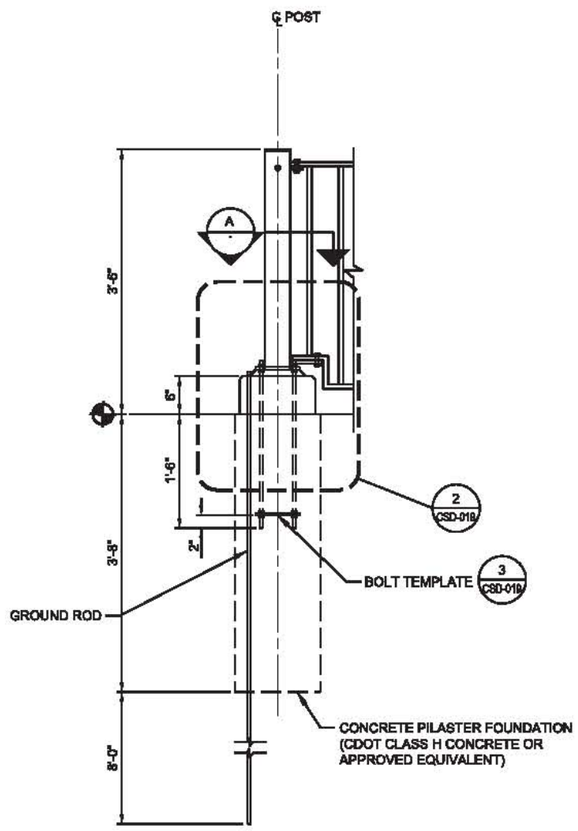

1 ANCHOR ROD ALTERNATE

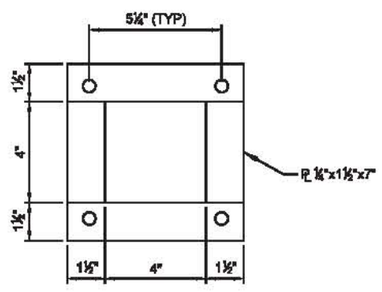

3 BOLT TEMPLATE DETAIL

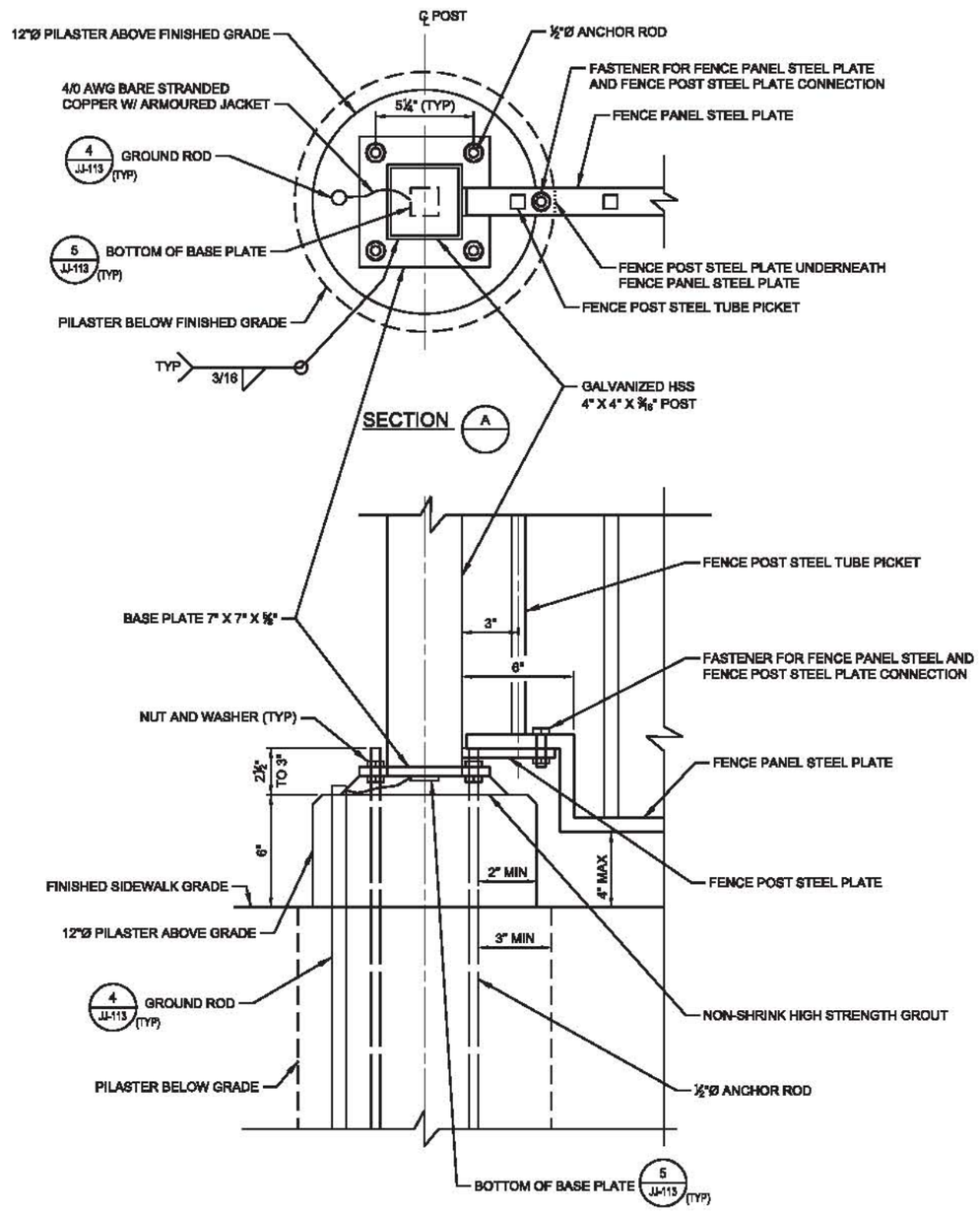

2 ANCHOR ROD ALTERNATE DETAIL

NOTES:

1. EACH POST MUST TEST AT 25 OHMS OR LESS. INSTALL ADDITIONAL GROUND RODS AT OUTSIDE POSTS AT LOCATIONS NOT MEETING CRITERIA.
2. GROUND RODS REQUIRED FOR EACH POST OF THE SWING GATE AND AT EACH END POST FOR EACH STRING OF FENCE. INTERMEDIATE POSTS REQUIRE JUMPER FROM FENCE POSTS TO FENCE PANEL. ALL EXPOSED COPPER SHALL BE ARMOURED.
3. CONTRACTOR CAN CHOOSE METHOD FOR FASTENING BOLT TEMPLATE TO ½" BOLT SO THAT ANCHOR RODS REMAIN PLUMB DURING CONSTRUCTION.
4. ANCHOR RODS SHALL BE ASTM F1554 GRADE 55 AND GALVANIZED FOR THE TOP 9".
5. BASE PLATE SHALL BE ASTM A572 GRADE 55 AND GALVANIZED.
6. NUTS SHALL BE HEAVY HEX ASTM A563 GRADE A AND WASHERS SHALL BE F436. ALL HARDWARE SHALL BE GALVANIZED.
7. LEVELING NUTS AND WASHERS ARE REQUIRED ON BOTTOM SIDE OF BASE PLATE.
8. ½" CHAMFER TO BE PROVIDED AROUND TOP OF PILASTER.

RELEASED FOR CONSTRUCTION
R Wall 6-1-15

NO.	REVISIONS	BY	DATE
0	DCN-FHDR-00874, CDRL #7B-04.00a, NEW SHEET ADDED	MAB	05/29/15

DESIGNED BY: MAB DATE: 04/10/15
DRAWN BY: MS DATE: 04/10/15
CHECKED BY: RR DATE: 05/26/15
APPROVED BY: JEK DATE: 05/29/15

FASTRACKS RTD
eagle P3
FLUOR HDR GLOBAL DESIGN CONSULTANTS

COLORADO LICENSED PROFESSIONAL ENGINEER 42258 5/29/15

DENVER TRANSIT PARTNERS

PROJECT WIDE

STANDARD DETAILS - CIVIL
PEDESTRIAN CHANNELIZATION FENCE
ANCHOR ROD ALTERNATE DETAIL

SHEET REFERENCE NUMBER: CSD-019

c:\pwworking\rtd_eagle_p3\mschwab\dms12258\7B-04.00a_PW-CSD-019.dgn
5/29/2015
USER: mschwab

APPENDIX D

DTP EAGLE FENCE AND GATE SPECIFICATIONS

DENVER TRANSIT CONSTRUCTORS (DTC)
Part of the Denver Transit Partners (DTP) Team

Form CQP 0111-1 Rev 82

CONSTRUCTION SUBMITTAL COVER SHEET

Subcontractor/Seller:	**Denver Transit Constructors**	**Sequential Submittal No.:**	00314
DTC Engineer:	Tyler Huchinson	**Phone Number:**	(916) 240-2583
Subcontract/ Purchase Agreement No.:	DTC-0-0000	**Spec. Section:**	03 31 33 - Structural Concrete for Bridges and Walls
Location:	EPW - EAGLE Project Wide DIR	**Dwg. Reference (If Applicable):**	N/A
Functional Area	Civil / Site Work	**Drawing CDRL #**	78-09.00
Engineer of Record (EOR) or Third Party	To: Jason Buechler : F/HDR	**Document Number:**	SUB-DTC-00314-03.31.33-EPW-R0 - Stations - Topping Slab Mix Design
Third Party/DTP Internal	Workflow Step 3: If not filled out #N/A		

DROP DOWN BOXES:

Document Type:	**Submitted For:**	**Revision:**
Mix Design (Product Data)	**Review / Approval**	**0**

Submittal Subject: **Stations - Topping Slab Mix Design**

Submittal Description:

Please review the mix design to be used for the topping slabs at all of the commuter rail stations. Please review and approve this is acceptable.

Date Submitted:	6/20/2014	Requested Response Date:	6/27/2014
Deviation:	No	Substitution:	No

Submittal Notes: See attached flow:

DTP Document Control will place stamp in this box once workflow is completed:

See Comments on Page 2

Approved with Comments
by Denver Transit Constructors
6/23/2014

Note:

Checking is only for general conformance with the design concept of the project and general compliance with the information given in the subcontract/purchase documents. Any action shown is subject to the requirements of the plans and specifications. Subcontractor/Seller is responsible for dimensions which shall be confirmed and corrected at the job site, fabrication processes and techniques of construction, coordination of this work with that of all other trades and the satisfactory performance of his work.

Approval of submittals shall not relieve contractor from successful completion of work, nor shall it relieve the contractor from responsibility for errors in the submittals, such approval shall not wave any of the requirements of the plans and specification or relieve contractor of any delegation from defective work, materials, and equipment rejected, notwithstanding such approval.

RTD Fastracks - Eagle P3
Workflow Search Export To Excel
Project: **RTD Fastracks - Eagle P3**
Generated By: DTC Document Control, Denver Transit Constructors
Generated On: Saturday, June 28, 2014 9:53:59 AM

Number of Results:2
Showing Result 1 to 2

Workflow No.	Workflow Name	Document No.	Step Name	Assigned To	Step Outcome	Step Status	Date Due	Date Completed	Comments
WF-010134	Submittal Workflow - CDRL 9-31.SUB-DTC-00314-03.31.33-EPW-R0: Stations - Topping Slab Mix Design	SUB-DTC-00314-03.31.33-EPW-R0	Area Engineer Review	Mr Clay Collins - DTC - Denver Transit Constructors, Dennis McGrath - DTC - Denver Transit Constructors, Eric Chiasson - DTC - Denver Transit Constructors, Mr Jesse Gross - DTC - Denver Transit Constructors, Katie Lauterbach - DTC - Denver Transit Constructors, Mr Kirk Bergstrom - DTC - Denver Transit Constructors, Tom Marzolf - DTC - Denver Transit Constructors	Approved	Completed	6/21/14	6/20/14	T. Marzolf
WF-010134	Submittal Workflow - CDRL 9-31.SUB-DTC-00314-03.31.33-EPW-R0: Stations - Topping Slab Mix Design	SUB-DTC-00314-03.31.33-EPW-R0	FHDR Review	Mr Jason Buechler - FHDR - Fluor/HDR Global Design Consultants, Sally Doles - FHDR - Fluor/HDR Global Design Consultants	Approved with Comments	Completed	6/26/14	6/23/14	Checking is only for general conformance with the design concept of the project and general compliance with the information given in the subcontract/purchase documents. Any action shown is subject to the requirements of the plans and specifications. Subcontractor/Seller is responsible for dimensions which shall be confirmed and corrected at the job site, fabrication processes and techniques of construction, coordination of this work with that of all other trades and the satisfactory performance of his work. Approval of submittals shall not relieve contractor from successful completion of work, nor shall it relieve the contractor from responsibility for errors in the submittals, such approval shall not wave any of the requirements of the plans and specification or relieve contractor of any delegation from defective work, materials, and equipment rejected, notwithstanding such approval. S.Doles

West Central Region Office
1707 Cole Boulevard, Suite 100
Golden, Colorado 80401
Telephone: (303) 985-1070
Facsimile: (303) 716-5318
To Order: 303.744.2378

AGGREGATE INDUSTRIES

Project Mix Designs

Date: 6/19/2014

Contractor: Denver Transit Constructors
Attention:
Project: Eagle P3
Location: Smith & Chambers

Mix	Usage	Mix Number	f 'c	w/c+p	Slump	Air
1	Station Stop Topping Slabs (With CNI)	6506160N	5000	0.39	3.00 - 5.00"	4.0 - 8.0%

IF FIBERS OR COLOR ARE REQUIRED IN THE MIX, IT MUST BE SPECIFIED WHEN ORDERING!

Sales Representative: Mike Morris

Main Plant: 905

ACI 301-10 1.6.4.1.c: Testing agency will report all tests and inspection results to Architect/Engineer, Contractor, and Concrete supplier within seven days after tests and inspections are performed.

Reviewed By
COLORADO REGISTERED PROFESSIONAL ENGINEER
KURT YODESCHI
26425
6-19-2014

Please forward results to:
Aggregate Industries
Attention: Stephen Herald
1705 S. Acoma
Denver, Colorado 80223

1992 - 2014 Quadrel, Inc.

Quadrel iService SM

AGGREGATE INDUSTRIES
West Central Region

AGGREGATE INDUSTRIES

CONCRETE MIX DESIGN SUBMITTAL

Contractor: Denver Transit Constructors

Project Name: Eagle P3

Mix I.D.: **6506160N**

Qualification: ACI 301-10 4.2.3.2.a

Intended Use: Station Stop Topping Slabs (With CNI)

PROPORTIONS	1	cu.yd. (SSD)	
ASTM C150 Type I-II Cement	565	LBS.	Cement Type I-II (Holcim)
ASTM C618 Fly Ash F	155	LBS.	Headwaters Class F (Jim Bridger)
ASTM C33 # 67 Coarse Aggregate	1659	LBS.	Morrison #57/#67 (Aggregate Industries)
ASTM ASTM C33 Natural Sand Fine Aggregate	1155	LBS.	Platte Valley Sand (Aggregate Industries)
ASTM Potable Water	266	LBS.	31.83 gal/cy
ASTM C260 Sika Air Air Entrainer	0.65	oz/cwt C+P	4.68 oz/cy
ASTM C494 Sika ViscoCrete 2100 Type F High R	As Needed	oz/cwt C+P	
ASTM C494 Sika Plastocrete 161 Type A Water	6.0	oz/cwt C+P	43.20 oz/cy
ASTM C494 Sika CNI Corrosion Inhibitor	2.0	gal	2.00 gal/cy
ASTM ASTM C494 Sikatard 440 Type B Retar	As Needed	oz/cwt C+P	

Reviewed By

COLORADO REGISTERED
KURT TODESCHI
26425
6-17-2014
PROFESSIONAL ENGINEER

PHYSICAL PROPERTIES

Slump:	3.00 - 5.00"
Air Content:	4.0 - 8.0%
w/c + p ratio:	0.39

COMPRESSIVE STRENGTH

$f'c =$ 5,000 psi @ 28 days

Production and delivery in accordance with ASTM C 94 Standard Specification for Ready-Mixed Concrete. Compressive strength performance is conditional with strict adherence to the current ASTM Standards relating to concrete, and the latest revisions of ACI 301 and 318.

* Aggregate Industries mixes are based on 90 minutes delivery time provided that the concrete temperatures are at or below 90 deg F.
* Aggregate Industries reserves the right to make aggregate and or admixture field adjustments to maintain proper yield and workability.
* Aggregate Industries will not accept any test as valid if concrete was not brought up to ordered, or placement slump, prior to sampling and testing as per ASTM C-94 Section 11.7, ASTM C-172 Section 5-2.3, and CDOT 601.08
* Aggregate Industries will only guarantee air content at the back of the truck when tested according to ASTM C231/AASHTO T152 and cannot guarantee in place air content.
* Material represented in this submittal are based on currently available inventory. Should a material source change it will be replaced with an equal or greater product. Material certifications will be available upon request.

Please direct inquiries to:
Mike Morris
Senior Sales Representative
Phone: (303) 799-8215
Fax: (303) 799-6107
mike.morris@aggregate-us.com

COLORADO REGISTERED
KURT TODESCHI
26425
6-19-2014
PROFESSIONAL ENGINEER

Date: 6/19/2014

AGGREGATE INDUSTRIES

Units : US

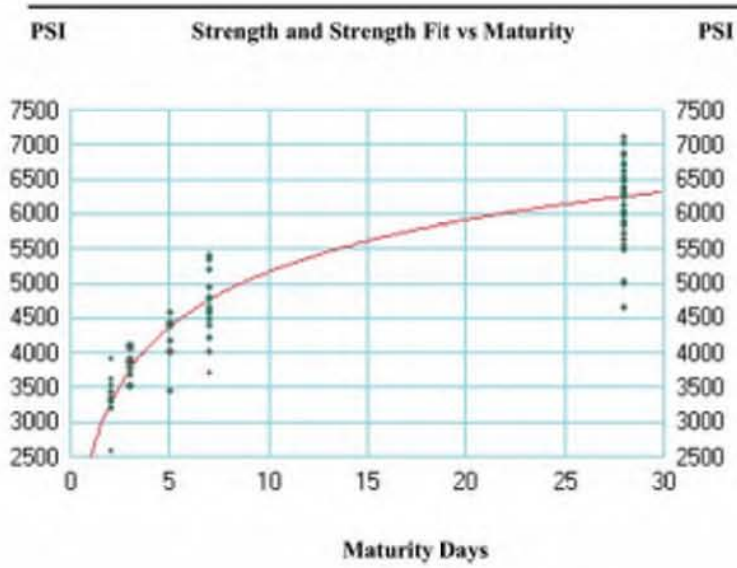

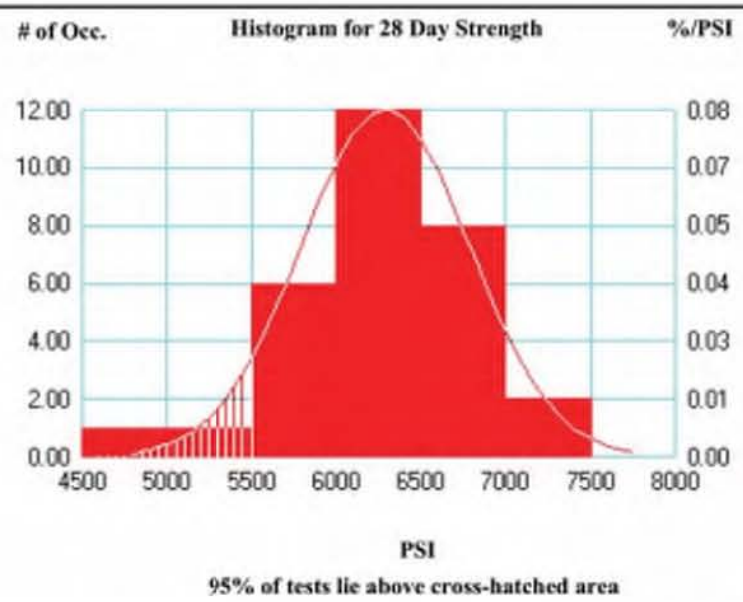

Mix Name: 6506160N **Mix Strength: 5,000 PSI at 28.0 Days**

STRENGTH SUMMARY, Compression Strengths Either 4" x 8" Or 6" x 12"

No. Of Tests	Avg Slump	Avg Air	Avg 7 Day	Avg 28 Day	Avg Acc Age	Accept Age	Std Dev	ACI318 Req'd
30	4.56	5.68	4760	6290	6290	28	400	5540

DETAILED STRENGTH, Compression Either 4" x 8" Or 6" x 12"

Batch Number	Date	Slump	Spread	Air	Strengths 7 Day	28 Day	Acc Age	Acc Age	Acc Age Run Avg 3
67546050	5/4/2013	5.00		5.20	4580	6230	6230	28	
62023635	5/4/2013	4.00		5.10	5350	7010	7010	28	
62023651	5/4/2013	4.50		6.50	4580	6340	6340	28	6530
62023659	5/4/2013	4.25		5.80	4650	6300	6300	28	6550
62023669	5/4/2013	4.50		6.00	4940	6370	6370	28	6340
62023676	5/4/2013	4.75		6.80	4380	5940	5940	28	6200
62024052	5/10/2013	4.50		7.00	4410	6250	6250	28	6180
62024058	5/10/2013	4.50		5.90	4570	6420	6420	28	6200
62024064	5/10/2013	5.00		5.40	4800	6450	6450	28	6370
62024040	5/10/2013	4.25		5.00	4670	6590	6590	28	6480
67547025	5/20/2013	4.50		7.00	4600	6080	6080	28	6370
67547263	5/23/2013	5.00		7.80		6410	6410	28	6360
67547277	5/23/2013	5.00		5.50		6860	6860	28	6450
67547286	5/23/2013	5.50		4.70		6740	6740	28	6670
67547298	5/23/2013	5.00		5.40		6800	6800	28	6800
67547307	5/23/2013	4.25		4.70		7030	7030	28	6860

1992 - 2014 Quadrel, Inc.

Quadrel iService SM

DETAILED STRENGTH, Compression Either 4" x 8" Or 6" x 12"

Batch Number	Date	Slump	Spread	Air	Strengths 7 Day	28 Day	Acc Age	Acc Age	Acc Age Run Avg 3
67548000	6/4/2013	4.25		5.00	5180	6780	6780	28	6870
67548036	6/4/2013	5.00		5.50	4790	6530	6530	28	6780
67548048	6/4/2013	4.75		5.20	4490	6350	6350	28	6550
62025793	6/4/2013	4.00		4.50	4940	6540	6540	28	6470
67548260	6/7/2013	4.50		6.50	5220	6490	6490	28	6460
67548276	6/7/2013	5.00		5.00	5420	6770	6770	28	6600
67548255	6/7/2013	4.00		7.40	5400	6440	6440	28	6570
60316870	9/5/2013	4.00		3.50	4470	5550	5550	28	6250
69316884	9/6/2013	4.50		6.00		4890	4890	28	5630
60316913	9/6/2013	5.00		6.00	4620	5980	5980	28	5470
60316995	9/9/2013	4.00		3.00	5330	5790	5790	28	5550
60317019	9/17/2013	4.00		5.60	4750	5930	5930	28	5900
67562786	3/5/2014	4.00		6.50	3980	5370	5370	28	5700
67564241	4/5/2014	5.25		6.80	4210	5560	5560	28	5620

Material Safety Data Sheet

Identity: WET UNHARDENED AND DRY HARDENED CONCRETE

Section I - Manufacturer Information

Aggregate Industries
1707 Cole, Golden, CO 80401
Information Phone Number (303) 985-1070

Section II -Hazardous Ingredients/Product Identification

Hazardous Components (specific Chemical Identity Common Name(s)
OSHA PEL 15 mg/m3 (total dust); 3O/(%SiO_2)mg/m3 (total crystalline silica particulate) 10/(%SiO_2+2)mg/m3 (Respirable particulate)
ACGIH TLV - 10 mg/m3 (total dust), 0.1 mg/m3 (total respirable quartz)
Formula – Mixture of Portland and blended Cements, concrete aggregates, and chemical admixtures.

Portland and blended cements (from the Portland Cement Association)

$3CaO \bullet SiO_2$	CAS #12168-85-3
$2CaO2 \bullet SiO_2$	CAS #10034-77-2
$3CaO \bullet Al_2O_3$	CAS #12042-78-3 or (NRMCA. #23042-78-3)
$4CaO \bullet Al_2O_3$-Fe_2O_3	CAS 1112068-35-8
$CaSO_4 \bullet 2H_2O_2$	CAS #13397-24-5 or (NRMCA #7778-18-9)

Plus traces of CaO, MgO, K_2SO_4 and Na_2SO_4

Other Ingredients:

- Concrete Aggregates - Inert gravel, sand and rocks
- Admixtures may include fly ash and very small amounts of organic and inorganic materials, which have no effect on the hazards associated with the use of this product.

Section III -Physical/Chemical Characteristics

Boiling Point:	NA	Specific Gravity (H_2O = 1):	NA
Vapor Pressure	NA	Melting Point:	NA
Vapor Density (Air = 1):	NA	Evaporation Rate (Butyl Acetate = 1):	NA

Solubility in water: Slight (0.1 to 1%) for wet cold concrete
Appearance and Odor: **Hardened concrete** is a solid, odorless material. **Wet concrete** is a gray, plastic, flowable, granular mud.

Section IV -Fire and Explosion Hazard Data

Flash Point:	NA	Flammable Limits:	NA
LEL:	NA	UEL:	NA
Extinguishing Media:	NA	Special Fire Fighting Procedures:	NA

Unusual Fire and Explosion Hazards: None

Section V - Reactivity Data

Stability: Stable__X__ Unstable_____
Product stiffens and hardens in 2 to 8 hours and is no longer considered hazardous.
Incompatibility (Materials to avoid): None
Hazardous Polymerization: Will not occur

Section VI -Health Hazard Data

Route(s) of entry: Inhalation? Yes Skin? Yes Ingestion? Unlikely
Health Hazards (Acute and Chronic): Acute - Wet Plastic, unhardened concrete can dry the skin and cause alkali burns (Cement Dermatitis). Overexposures to very high levels of crystalline silica may cause acute silicosis, which is typically fatal. Chronic - Hypersensitive individuals may develop an allergic dermatitis. Cement may contain traces of chromium. Concrete dust may contain more than 0.1% crystalline silica, which is a cancer hazard when respirable particles (<10 microns) are inhaled.
Carcinogenicity: Concrete products are not listed on the NTP, IARC, or OSHA list of carcinogens. IARC has classified respirable crystalline silica as a known human carcinogen (group 1).
Signs and Symptoms of Exposure to Skin: Irritation of skin and burning sensation particularly when exposure is in an area of skin previously subjected to abrasion or irritation.
Signs and Symptoms of Respiratory Exposure: Dust may irritate the nose, throat, and respiratory tract by mechanical abrasion. Symptoms of acute silicosis may include shortness of breath, cough, fever, weight loss, and chest pain.
Medical Conditions Generally Aggravated by Exposure: Wet concrete or dust may aggravate skin diseases. Individuals with chronic respiratory disorders should minimize inhalation of concrete dust.
Emergency and First Aid Procedures: EYES; Flush with large amounts of water for 15 minutes. Consult a physician if irritation persists. **SKIN;** Wash effected areas with soap and water. Consult physician if irritation persists **INHALATION;** Remove to fresh air. Cough, spit, and blow nose to remove dust. Consult physician if irritation persists.

Section VII -Precautions for Safe Handling and Use

Steps to Be Taken In Case Materials are Released or Spilled: Spill does not increase hazard.
Waste Disposal Method: Material can be retained until it hardens when it can be disposed of as common waste.
Precautions to Be Taken in Handling: Use barrier creams, rubber gloves, boots, and clothing to protect the skin from prolonged contact with plastic concrete. Particularly avoid abrasion of the skin in contact with unhardened plastic concrete. Precautions must he observed because cement burns occur with little warning. Little heat is sensed. Eye protection is not generally required except when placing methods cause splashing. In this case, tight fitting goggles should be used. Cutting, grinding, drilling, and crushing of hardened concrete can cause dusting that may cause cement burns also. Dust containing over 0.1% crystalline silica can be released during these operations. Use the precautions listed in section VIII to avoid overexposure.

Section VIII -Control Measures

Respiratory Protection: When exposed to dusts above recommended limits wear a NIOSH approved respirator.
Ventilation: Use local exhaust when cutting, grinding, crushing or drilling hardened concrete to maintain airborne dust below exposure limits.
Protective Gloves: See Section VII. **Eye Protection:** See Section VII.
Other Protective Clothing or Equipment: See Section VII **Work/Hygienic Practice:** See Section VII

DISCLAIMER
The information contained on this data sheet is offered, without charge, for use by technically qualified personnel at their discretion and risk. All statements, technical information, and recommendations contained herein are based on tests and data which we believe to be reliable, however, accuracy or completeness thereof is not guaranteed and no warranty of any kind is made with respect thereto. This information is not intended as a license to operate under or a recommendation to practice or infringe any patent of this company or others covering any process, composition of materials or use. Since the company shall not have control of the use of the product described herein, the company assumes no liability for loss or damage incurred from the proper or improper use of such product.

Warning

Contact with wet unhardened concrete, mortar, cement or cement mixtures can cause skin irritation, severe chemical burns, or serious eye damage. Avoid contact with eyes and skin. Wear waterproof gloves, a fully buttoned long-sleeved shirt, full-length trousers, and tight fitting eye protection when working with these materials. If you have to stand in wet concrete use waterproof boots that are tight at the top and high enough to keep concrete from flowing into them. If you are finishing concrete, wear knee pads to protect knees. Wash wet concrete, mortar, cement, or cement mixtures from your skin with fresh, clean water immediately after contact. Indirect contact through clothing can be as serious as direct contact, so promptly rinse out wet concrete, mortar, cement or cement mixtures from clothing. Seek immediate medical attention if you have persistent or severe discomfort. In case of eye contact, flush with plenty of water for at least 15 minutes. Consult a physician immediately if irritation persists. Avoid breathing dust from hardened concrete products. KEEP OUT OF REACH OF CHILDREN.

USER AGREES TO CONVEY THIS WARNING TO ALL PERSONS WHOM MAY USE OR COME INTO CONTACT WITH WET (UNHARDENED) CONCRETE, MORTAR, CEMENT, OR CEMENT MIXTURES.

CRMCA Concrete Quality Pre-Construction Checklist

www.crmca.org

Project Information

Project Name: _____ **Location:** _____

Project Representatives:

Owner: _____ Architect: _____

Structural Engineer: _____ Construction Manager: _____

General Contractor: _____ Concrete Supplier: _____

Testing Agency: _____ Other: _____

Concrete Mixture Design Submittals

Mixture Usage	Mixture Code	Special Attributes	Mixture Design Specifications				Approved Y/N
			Strength @ __ d	Max. w/cm	Slump (in.)	Air (%)	

Special Attribute Codes:

AE	Air Entrained	CLR	Color Addition	NCA	Non-Chloride Acceleration
NAE	Non-Air Entrained	CI	Corrosion Inhibiting	SF	Silica Fume
LTWT	Lightweight Agg.	SRA	Shrinkage Reduction	UFFA	Ultra Fine Fly Ash
SCC	Self-Consolidating	FP	Fiber Product	HVWT	Heavy Weight Aggregate
HRWR	High Range WRA	HE	High Early Strength	RET	Retardation/ Hyd. Stabilization
Other					

Concrete Quality Control/ Assurance

(Circle Yes or No)

Independent Testing Laboratory CCRL/AMRL* accredited including C1077? yes no

***CCRL Lab Listing** **AMRL Listing**

Name & Certification #

ACI Concrete Strength Testing Technician _____

ACI Field Testing Technician(s) _____

ACI Certification can be obtained by contacting the CRMCA at _____

www.crmca.org _____

ACI Certifcation Verification Link

Contractor's Responsibilities in accordance with ACI 301-10 Section 1.6.2

- Allow access to the project site or to the source of materials and assist Owner's testing agency in obtaining and handling samples at the project site or at the source of materials.
- Advise Owner's testing agency at least 24 hours in advance of operations to allow for scheduling of quality assurance tests, review of project requirements, and for the assignment of personnel.
- Provide space and source of electrical power on the project site for facilities to be used for initial curing of concrete test specimens as required by ASTM C31 for the sole use of Owner's quality assurance testing agency.

CRMCA Concrete Quality Pre-Construction Checklist

Concrete Sampling and Testing Requirements

Sampling Frequency: _____

Sampling Location: (Circle Yes or No)

Pt. of truck discharge (in accordance with ASTM C94)	yes	no
Pt. of placement (must be specified and comply with OSHA regulations)	yes	no

Note 1: The concrete supplier will be responsible for compliance when samples are obtained at truck discharge after 10% or before 90% of the batch has been discharged and tests are conducted in accordance with applicable ASTM standards.

Tests to be performed on each sample: (Circle Yes or No)

Slump:	yes	no	Compressive Strength:	yes	no
Air Content:	yes	no	# cylinders per test	_____	
Density (unit wt.):	yes	no	Flexural Strength:	yes	no
Temperature:	yes	no	Other: _____	yes	no

Note 2: ASTM C172, section 4.1.1 states, "Transport the individual samples to the place where fresh concrete tests are to be performed or where test specimens are to be molded." Section 4.1.2 states, " Start tests for slump, temperature and air content within 5 min. after obtaining the final portion of the composite sample."

Acceptance/Rejection of Fresh Concrete:

Who has the authority to accept or reject a concrete delivery? _____

What criteria will be used to accept or reject a concrete delivery? (Circle Yes or No)

Slump:	yes	no	Temperature:	yes	no
Air Content:	yes	no	Density (unit wt.)	yes	no
W/CM Ratio:	yes	no	Time Limit:	yes	no

Note 3: ASTM C94, section 7.2 states,"the producer shall not be responsible for the limitation of minimum slump or slump flow after 30 min. have elapsed starting either on arrival of the vehicle at the prescribed destination or at the requested delivery time, whichever is later."

Who's responsible for adding water and/or air entrainment at the project site? _____

Note 4: ASTM C94 section 12.7, allows a 'one-time' water addition as long as the maximum water content for the batch as established by the mixture design proportions has not been exceeded. A 'one-time' water addition may be several distinct additions provided no concrete has been discharged except for slump or slump flow testing. When air content is below the specified level, Section 8.3 allows the concrete supplier to adjust the level with additional air-entraining admixture.

Test Specimen Storage and Transportation

Standard Curing Method: (Concrete Acceptance) (Circle Yes or No)

Immersed in water-controlled temperature environment (Preferred)	yes	no
Storage box-controlled temperature environment	yes	no
Exposed to the environment	yes	no

Who's responsible for providing specimen storage water tank or box? _____

Who's responsible for maintaining the temperature of the storage environment? _____

Note 5: ASTM C31 states, "Immediately after molding and finishing, the specimens shall be stored for a period up to 48h in a temperature range from 60 and 80 F and in an environment preventing moisture loss from the specimens. For concrete mixtures with a specified strength of 6000 psi or greater, the initial curing temperature shall be between 68 and 78 F." ASTM C31 also states,"The storage temperature shall be controlled by use of heating and cooling devices, as necessary. Record the temperature using a maximum-minimum thermometer."

Note 6: ASTM C31 states, "Upon completion of initial curing, and within 30 min after removing the molds, cure specimens with free water maintained on their surfaces at all times at a temperature of 73.5 +/- 3.5 F. ..."

Transportation of Specimens to the Laboratory

ASTM C31, Section 11.1 states, " Specimens shall not be transported until at least 8 h after final set. During transporting, protect the specimens with suitable cushioning material to prevent damage from jarring. During cold weather, protect the specimens from freezing with suitable insulation material. Prevent moisture loss during transportation by wrapping the specimens in plastic, wet burlap, by surrounding them with wet sand, or tight fitting plastic caps on plastic molds. Transportation time shall not exceed 4 h."

When will specimens, cast on days preceding non-work days, be transported to the laboratory?

Please explain: _____

Field Curing Method:	(Form or Shoring Removal but not Acceptance)	(Circle Yes or No)	
	Storage under conditions consistent with concrete in the structure	yes	no
	Maturity	yes	no

Acceptance Criteria for Hardened Concrete (ACI 301/318)

In accordance with ACI 301-10, the Owner's testing agency will report results to the Owner, Architect/ Engineer, Contractor, and concrete supplier within 7 days of testing. ACI 301 also requires that the testing agency issue a report immediately, to these parties when it appears that furnished material is not in compliance with the specifications. Test results from standard molded and cured strength specimens will be evaluated separately for each concrete mixture. Evaluation is valid only if tests have been conducted in accordance with specified procedures. Validation of of tests not conducted in accordance with specified procedures will be the responsibility of the Owner's testing agency.

Acceptance of Concrete Strength in accordance with ACI 301-10

The strength of standard molded and cured strength specimens is satisfactory if the following criteria are met:

1.6.6.1 a Every average of three consecutive strength tests equals or exceeds the specified compressive strength f'c.

1.6.6.1 b No strength test result falls below f'c by more than 500 psi when f'c is 5000 psi or less, or by more than 0.10 f'c when f'c is more than 5000 psi.

Coring

Section 1.6.6.2- The strength of concrete in the area represented by cores, tested in accordance with ASTM C42, is considered adequate when the average compressive strength of the cores is at least 85% of f'c and if no single core is less than 75% of f'c.

Statement of Acknowledgement

The American Concrete Institute (ACI) and the ASTM International have established many standards and practices related to the performance and safety of concrete construction. The quality of concrete construction is heavily dependent upon the commitment of the project team to the standard practices associated with the production, delivery, placement, and testing of ready mixed concrete. We believe the information in this document accurately reflects the discussion(s) between all attendees.

	(Circle Yes or No)			(Circle Yes or No)	
Owner:	Yes	No	Architect:	Yes	No
Structural Engineer:	Yes	No	Construction Manager:	Yes	No
General Contractor:	Yes	No	Concrete Supplier:	Yes	No
Owners Testing Agency:	Yes	No	Testing Agency:	Yes	No

Email Address of Attendees:

Owner: _____

Architect: _____

Structural Engineer: _____

Construction Manager: _____

General Contractor: _____

Concrete Supplier: _____

Owners Testing Agency: _____

Testing Agency: _____

Notes or Comments:

Holcim

Material Certification Report

Material:	Portland Cement	Test Period:	01-Apr-2014
Type:	I-II(MH) ASTM C150	To:	30-Apr-2014

Certification

This Holcim cement meets the specifications of ASTM C150 for Type I-II(MH) cement.

General Information

Supplier:	Holcim (US) Inc.	Source Location:	Portland Plant
Address:	3500 State Highway 120 Florence, Co. 81226		3500 State Highway 120 Florence, Co. 81226
Telephone:	719-288-1431	Contact:	Dick Roush
Date Issued:	09-May-2014		

The following information is based on average test data during the test period.
The data is typical of cement shipped by Holcim; individual shipments may vary.

Tests Data on ASTM Standard Requirements

Chemical

Item	Limit[A]	Result
SiO_2 (%)	-	20.2
Al_2O_3 (%)	6.0 max	4.7
Fe_2O_3 (%)	6.0 max	3.3
CaO (%)	-	63.4
MgO (%)	6.0 max	1.4
SO_3 (%)	3.0 max[B]	3.3
Loss on Ignition (%)	3.0 max	2.3
Insoluble Residue (%)	0.75 max	0.38
CO_2 (%)	-	1.0
Limestone (%)	5.0 max	2.8
$CaCO_3$ in Limestone (%)	70 min	84
Inorganic Processing Addition (%)	5.0 max	0.0
Potential Phase Compositions[C]:		
C_3S (%)	-	55
C_2S (%)	-	16
C_3A (%)	8 max	7
C_4AF (%)	-	10
$C_3S + 4.75C_3A$ (%)	100 max	88

Physical

Item	Limit[A]	Result
Air Content (%)	12 max	7
Blaine Fineness (m^2/kg)	260-430	394
Autoclave Expansion (%) (C151)	0.80 max	0.01
Compressive Strength MPa (psi):		
3 days	10.0 (1450) min	29.6 (4300)
7 days	17.0 (2470) min	35.7 (5170)
Initial Vicat (minutes)	45-375	118
Mortar Bar Expansion (%) (C1038)		0.009
Heat of Hydration: kJ/kg (cal/g)[D] 7 Days (for informational purposes)	-	342(82)

Tests Data on ASTM Optional Requirements

Chemical

Item	Limit[A]	Result
Equivalent Alkalies (%)		0.68

Physical

Item	Limit[A]	Result

Notes

[A] Dashes in the limit / result columns mean Not Applicable.

[B] It is permissible to exceed the specification limit provided that ASTM C1038 Mortar Bar Expansion does not exceed 0.020 % at 14 days.

[C] Adjusted per Annex A1.6 of ASTM C150 and AASHTO M85.

[D] Test result represents most recent value and is provided for information only. Analysis of Heat of Hydration has been carried out by CTLGroup, Skokie, IL. This data may have been reported on previous mill certificates.

Additional Data

Inorganic Processing Addition Data

Item	Result[A]
Type	-
Amount (%)	-
SiO_2 (%)	-
Al_2O_3 (%)	-
Fe_2O3 (%)	-
CaO (%)	-
SO_3 (%)	-

Base Cement Phase Composition

Item	Result
C_3S (%)	57
C_2S (%)	16
C_3A (%)	7
C_4AF (%)	10

HEADWATERS RESOURCES

ASTM C618 Testing of
Jim Bridger Fly Ash

Sample Type:	**3200-ton**	**Report Date:**	**5/15/2014**
Sample Date:	**3/17 - 3/20/14**	**MTRF ID:**	**636JB**
Sample ID:	**BR-023-14-R**		

Chemical Analysis			**ASTM Limits Class F**	**ASTM Limits Class C**	**ASTM Test Method**
Silicon Dioxide (SiO2)	62.14	%			
Aluminum Oxide (Al2O3)	18.52	%			
Iron Oxide (Fe2O3)	4.18	%			
Sum of Constituents	84.84	%	70.0% min	50.0% min	D4326
Sulfur Trioxide (SO3)	0.53	%	5.0% max	5.0% max	D4326
Calcium Oxide (CaO)	5.33	%			D4326
Moisture	0.04	%	3.0% max	3.0% max	C311
Loss on Ignition	0.30	%	6.0% max	6.0% max	C311
Physical Analysis					
Fineness, % retained on #325	19.32	%	34% max	34% max	C311, C430
Strength Activity Index - 7 or 28 day requirement					C311, C109
7 day, % of control	89	%	75% min	75% min	
28 day, % of control	88	%	75% min	75% min	
Water Requirement, % control	95	%	105% max	105% max	
Autoclave Soundness	0.02	%	0.8% max	0.8% max	C311, C151
Density	2.33				C604

Headwaters Resources certifies that pursuant to current ASTM C618 protocol for testing, the test data listed herein was generated by applicable ASTM methods and meets the requirements of ASTM C618.

Doug Rhodes, CET
Facility Manager

AAP AASHTO R18

Materials Testing & Research Facility
2650 Old State Highway 113
Taylorsville, Georgia 30178
P: 770.684.0102
F: 770.684.5114

WESTEST

845 Navajo Street • Denver, CO 80204

SPECIALISTS TO THE PAVING INDUSTRY

Phone: 303.975.9959 • Fax: 303.975.9969 • Email:office@westest.net

February 26, 2014

Aggregate Industries
1705 S. Acoma Street
Denver, CO 80223

Attention: Mr. John Cheever

Subject: Laboratory Test Results
Morrison Quarry
ASTM C 33 Aggregate Tests
ASTM C 33 Size No. 57/67 Coarse Aggregate
ASTM C 33 Size No. 4 Coarse Aggregate
WesTest Project No. 404514

Gentlemen:

Enclosed on Tables 1 and 2 are the results of aggregate physical property and quality tests, done in general accordance with ASTM and AASHTO criteria, on concrete aggregate sampled from the above-referenced source on January 9, 2014.

The test results indicate the material meets the requirements of ASTM C 33, *Standard Specifications for Concrete Aggregates* and the Colorado Department of Transportation requirements for the properties tested.

If you have any questions on the data presented, please contact us at your convenience.

Sincerely,
WesTest

Dylan Hullinger, EIT

COLORADO LICENSED
ERIC R. WEST
20475
2-26-14
PROFESSIONAL ENGINEER

Reviewed by:
WesTest

Eric R. West, P.E.

WESTEST
SPECIALISTS TO THE PAVING INDUSTRY
845 Navajo Street
Denver, CO 80204
303.975.9959, Fax 303.975.9969

LABORATORY TEST REPORT

CLIENT: Aggregate Industries
SOURCE: Morrison Quarry
SAMPLED BY: Client
PROJECT: Morrison Quarry Aggregate Testing

WesTest PROJECT NO.: 404514
REPORT DATE: February 26, 2014

MATERIAL DESCRIPTION	ASTM C 33 Size No. 57/67 Coarse Aggregate
DATE SAMPLED	January 9, 2014
SAMPLE LOCATION	Stockpile

Aggregate Physical Property and Quality Tests (ASTM C 33 Specifications)

ASTM C 117 & C 136, AASHTO T 11 & T 27

SIEVE SIZE	% Passing	ASTM No. 57 Specification	ASTM No. 67 Specification
1-1/2"	100	100	
1"	100	95 - 100	100
3/4"	90		90 - 100
1/2"	44	25 - 60	
3/8"	27		20 - 55
# 4	7	0 - 10	0 - 10
# 8	2	0 - 5	0 - 5
# 16	2		
# 30	1		
# 50	1		
# 100	1		
# 200	1.2	0 - 1.5	0 - 1.5

ASTM C 127, AASHTO T 85
Bulk Specific Gravity = 2.664, Bulk Specific Gravity (SSD) = 2.678, Apparent Specific Gravity = 2.701, Absorption = 0.5%

ASTM C 131, AASHTO T 96, L.A. Abrasion
Grading B, Loss = 23%
Specification: 45% Max.

ASTM C 142, AASHTO T 112, Clay Lumps & Friable Particles
COARSE AGG. = 0.0%, Specification: 3.0% Max.

ASTM C 123, AASHTO T 113 Lightweight Particles in Aggregate

SAMPLE WT. (g)	LIQUID TYPE / SPECIFIC GRAVITY	LIGHTWEIGHT PARTICLES	SPEC.
3972.6	$ZnCl_2$/2.0	0.0%	0.5% Max.
3972.6	$ZnBr_2$/2.4	0.0%	3.0% Max.

ASTM C 88, AASHTO T 104, Magnesium/Sodium Sulfate Soundness, 5 Cycles

SIEVE SIZE	GRADING OF ORIGINAL SAMPLE	WEIGHT BEFORE TEST, g		PERCENT PASSING AFTER TEST		WEIGHTED PERCENT LOSS	
		Mag.	Sod.	Mag.	Sod.	Mag.	Sod.
1-1/2" to 1"	11	1010.9	1005.5	1.1	0.5	0.1	0.1
1" to 3/4"		506.6	501.0				
3/4" to 1/2"	68	667.4	671.9	1.9	1.3	1.3	0.9
1/2" to 3/8"		329.0	331.1				
3/8" to No.4	21	300.8	299.5	4.8	4.0	1.0	0.8
TOTAL	100	COARSE AGG. TOTAL 93%				2	2
SPECIFICATION:						18 Max.	12 Max.

ASTM C 29, AASHTO T 19
Bulk Density and Voids in Aggregate

Rodding Method; Bulk Density = 101 pcf
Voids in Aggregate = 39%

COMMENTS

TABLE 1

WESTEST

845 Navajo Street • Denver, CO 80204

SPECIALISTS TO THE PAVING INDUSTRY

Phone: 303.975.9959 • Fax: 303.975.9969 • Email:office@westest.net

Aggregate Industries
1705 S. Acoma Street
Denver, CO 80223

February 27, 2014

Attention: Mr. John Cheever

Subject: Laboratory Test Results
Morrison Quarry
ASTM C 1260 Potential Alkali Reactivity of Aggregates
ASTM C 33 Size No. 57/67 Coarse Aggregate
WesTest Project No. 404514

Gentlemen:

Enclosed as Figure 1 are the results of potential alkali reactivity testing (mortar bar method), performed on aggregate sampled from the above-referenced source on January 9, 2014. The aggregate was prepared and tested in general accordance with ASTM Procedures. ASTM C 1260 defines the potential of an aggregate for deleterious expansion as follows:

Test Expansion	Classification	Potential for Deleterious ASR
< 0.10%	Innocuous	Low
0.10% to 0.20%	Inconclusive	Not Predictable
> 0.20%	Deleterious	High

Based on the test result of 0.08% expansion at 28 days in solution, 30 days after casting, the potential for deleterious alkali-silica behavior of this aggregate in concrete is considered Low.

If you have any questions on the data presented, please contact us at your convenience.

Sincerely,
WesTest

COLORADO LICENSED
ERIC R. WEST
20475
2-27-14
PROFESSIONAL ENGINEER

Eric R. West, P.E.

WESTEST
SPECIALISTS TO THE PAVING INDUSTRY
845 Navajo Street
Denver, CO 80204
303.975.9959

LABORATORY TEST REPORT

POTENTIAL ALKALI-SILICA REACTIVITY
OF COMBINATIONS OF CEMENTITIOUS MATERIALS AND AGGREGATES
(MORTAR-BAR METHOD)
ASTM C 1260

CLIENT: Aggregate Industries
PROJECT NO.: 404514

REPORT DATE: February 27, 2014
SAMPLE ID: 4045C

AGGREGATE: SOURCE: Morrison Quarry
SIZE: ASTM C 33 Size No. 57/67 Coarse Aggregate
COMMENTS: Aggregate graded as per Section 8.2, Table 1

CEMENT: SOURCE: Holcim
TYPE: I/II
AUTOCLAVE EXPANSION: 0.02%
ALKALIS CONTENT: 0.75%
COMMENTS: Cement data provided by Holcim

MIX WATER: 0.47 w/(c+p) ratio

ADMIXTURES: None

EFFECTIVE GAUGE LENGTH = 250 mm

	1/29/14	1/30/14	2/3/14		2/6/14		2/10/14		2/13/14		2/17/14		2/20/14		2/24/14		2/27/14	
	Initial	Zero	4 Days		7 Days		11 Days		14 Days		18 Days		21 Days		25 Days		28 Days	
Specimen	Comparator Reading	Comparator Reading	Comparator Reading	Length Change	Comparator Reading	Length Change	Comparator Reading	Length Change	Comparator Reading	Length Change	Comparator Reading	Length Change	Comparator Reading	Length Change	Comparator Reading	Length Change	Comparator Reading	Length Change
A	-0.266	-0.080	-0.062	0.01%	-0.050	0.01%	-0.030	0.02%	0.012	0.04%	0.044	0.05%	0.062	0.06%	0.080	0.06%	0.118	0.08%
B	-1.022	-0.832	-0.814	0.01%	-0.798	0.01%	-0.772	0.02%	-0.738	0.04%	-0.708	0.05%	-0.684	0.06%	-0.668	0.07%	-0.640	0.08%
C	-0.352	-0.162	-0.140	0.01%	-0.132	0.01%	-0.100	0.02%	-0.068	0.04%	-0.038	0.05%	-0.018	0.06%	0.004	0.07%	0.040	0.08%
AVERAGE		-0.358	-0.339	0.01%	-0.327	0.01%	-0.301	0.02%	-0.265	0.04%	-0.234	0.05%	-0.213	0.06%	-0.195	0.07%	-0.161	0.08%

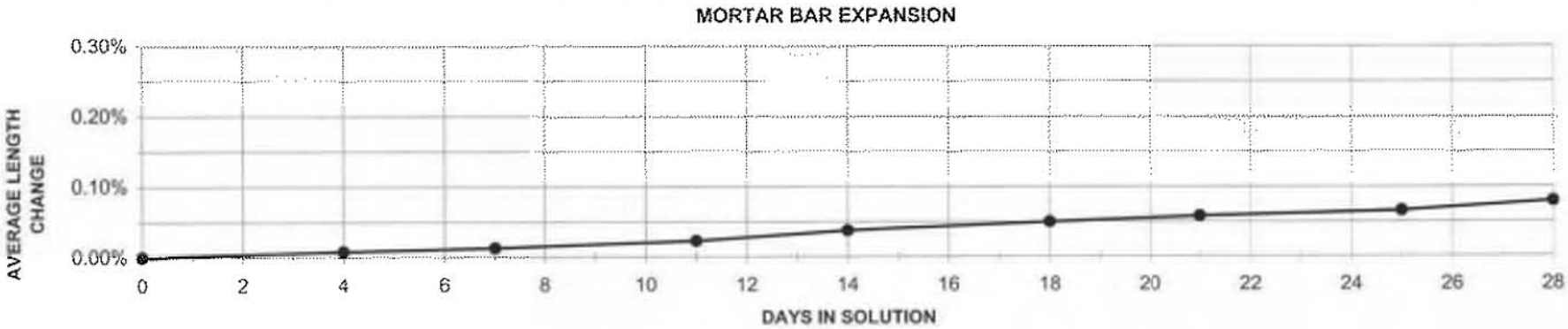

FIGURE 1

WESTEST

845 Navajo Street • Denver, CO 80204

SPECIALISTS TO THE PAVING INDUSTRY

Phone: 303.975.9959 • Fax: 303.975.9969 • Email:office@westest.net

February 25, 2014

Aggregate Industries
1705 S. Acoma Street
Denver, CO 80223

Attention: Mr. John Cheever

Subject: Laboratory Test Results
Platte Valley Pit
ASTM C 33 Aggregate Tests
ASTM C 33 Fine Aggregate
ASTM C 33 Size No. 8 Coarse Aggregate
ASTM C 33 Size No. 67 Coarse Aggregate
Squeegee
Masonry Sand
WesTest Project No. 404714

Gentlemen:

Enclosed on Tables 1 through 5 are the results of aggregate physical property and quality tests, done in general accordance with ASTM and AASHTO criteria, on concrete aggregate sampled from the above-referenced source on January 7, 2014.

The test results indicate the material meets the requirements of ASTM C 33, *Standard Specifications for Concrete Aggregates* and the Colorado Department of Transportation requirements for the properties tested.

If you have any questions on the data presented, please contact us at your convenience.

Sincerely,
WesTest

Dylan Hullinger, EIT

COLORADO LICENSED
ERIC R. WEST
20475
2-25-14
PROFESSIONAL ENGINEER

Reviewed by:
WesTest

Eric R. West, P.E.

WESTEST
SPECIALISTS TO THE PAVING INDUSTRY
845 Navajo Street
Denver, CO 80204
303.975.9959, Fax 303.975.9969

LABORATORY TEST REPORT

CLIENT: Aggregate Industries
SOURCE: Platte Valley Pit
SAMPLED BY: Client
PROJECT: Platte Valley Pit Aggregate Testing

WesTest PROJECT NO.: 404714
REPORT DATE: February 19, 2014

MATERIAL DESCRIPTION	ASTM C 33 Fine Aggregate
DATE SAMPLED	January 7, 2014
SAMPLE LOCATION	Stockpile

Aggregate Physical Property and Quality Tests (ASTM C 33, AASHTO M 6 Specifications)

ASTM C 117 & C 136, AASHTO T 11 & T 27

SIEVE SIZE	% Passing	ASTM C 33 Spec.	AASHTO M 6 Spec.
1"			
3/4"			
1/2"			
3/8"	100	100	100
# 4	100	95 - 100	95 - 100
# 8	93	80 - 100	80 - 100
# 16	66	50 - 85	50 - 85
# 30	38	25 - 60	25 - 60
# 50	14	5 - 30	10 - 30
# 100	3	0 - 10	2 - 10
# 200	0.8	0 - 3	0 - 2
Fineness Modulus	2.87	2.3 - 3.1	2.3 - 3.1

ASTM C 128, AASHTO T 84
Bulk Specific Gravity = 2.618, Bulk Specific Gravity (SSD) = 2.629, Apparent Specific Gravity = 2.646, Absorption = 0.4%

ASTM D 2419, AASHTO T 176
Sand Equivalent Value = 92
Specification: 80 Min. (CDOT)

ASTM C 142, AASHTO T 112 Clay Lumps & Friable Particles
FINE AGG. = 0.0%, Specification: 3.0% Max.

ASTM C 123, AASHTO T 113 Lightweight Particles in Aggregate

SAMPLE WT.	LIQUID TYPE / SPECIFIC GRAVITY	LIGHTWEIGHT PARTICLES	SPEC.
509.6	$ZnCl_2$/2.0	0.0%	0.5% Max.
509.6	$ZnBr_2$/2.4	0.0%	3.0% Max.

ASTM C 88, AASHTO T 104, Sodium Sulfate Soundness, 5 Cycles

SIEVE SIZE	GRADING OF ORIGINAL SAMPLE	WEIGHT BEFORE TEST, g	PERCENT PASSING AFTER TEST	WEIGHTED PERCENT LOSS
Minus #100	3			
# 50 to # 100	11			
# 30 to # 50	24	99.9	5.4	1.3
# 16 to # 30	28	100.0	1.4	0.4
# 8 to # 16	27	100.0	3.2	0.9
# 4 to # 8	7	100.1	2.2	0.2
3/8" to # 4	0			
TOTAL	100	FINE AGG. TOTAL 100%		3
SPECIFICATION:				10 Max.

ASTM C 40, AASHTO T 21 Organic Impurities:
Less than Organic Plate No. 1
Specification: Organic Plate No. 3 or Less

ASTM C 29, AASHTO T 19
Rodding Method; Bulk Density = 106 pcf;
Voids in Aggregate = 35%

COMMENTS:

TABLE 1

WESTEST

845 Navajo Street • Denver, CO 80204

SPECIALISTS TO THE PAVING INDUSTRY

Phone: 303.975.9959 • Fax: 303.975.9969 • Email:office@westest.net

Aggregate Industries
1705 S. Acoma Street
Denver, CO 80223

February 27, 2014

Attention: Mr. John Cheever

Subject: Laboratory Test Results
Platte Valley Pit
ASTM C 1260 Potential Alkali Reactivity of Aggregates
ASTM C 33 Fine Aggregate
ASTM C 33 Size No. 67 Coarse Aggregate
WesTest Project No. 404714

Gentlemen:

Enclosed as Figures 1 and 2 are the results of potential alkali reactivity testing (mortar bar method), performed on aggregate sampled from the above-referenced source on January 7, 2014. The aggregate was prepared and tested in general accordance with ASTM Procedures. ASTM C 1260 defines the potential of an aggregate for deleterious expansion as follows:

Test Expansion	Classification	Potential for Deleterious ASR
< 0.10%	Innocuous	Low
0.10% to 0.20%	Inconclusive	Not Predictable
> 0.20%	Deleterious	High

Based on the test results of 0.06% and 0.03% expansion at 14 days in solution, 16 days after casting, the potential for deleterious alkali-silica behavior of this aggregate in concrete is considered low.

If you have any questions on the data presented, please contact us at your convenience.

Sincerely,
WesTest

COLORADO LICENSED
ERIC R. WEST
20475
2-27-14
PROFESSIONAL ENGINEER

Eric R. West, P.E.

WESTEST
SPECIALISTS TO THE PAVING INDUSTRY
845 Navajo Street
Denver, CO 80204
303.975.9959

LABORATORY TEST REPORT

POTENTIAL ALKALI-SILICA REACTIVITY OF COMBINATIONS OF CEMENTITIOUS MATERIALS AND AGGREGATES (MORTAR-BAR METHOD) ASTM C 1260

CLIENT: Aggregate Industries
PROJECT NO.: 404714

REPORT DATE: February 27, 2014
SAMPLE ID: 4047A

AGGREGATE:	SOURCE: Platte Valley Pit SIZE: ASTM C 33 Fine Aggregate COMMENTS: Aggregate graded as per Section 8.2, Table 1
CEMENT:	SOURCE: Holcim TYPE: I/II AUTOCLAVE EXPANSION: 0.02% ALKALIS CONTENT: 0.75% COMMENTS: Cement data provided by Holcim
MIX WATER:	0.47 w/(c+p) ratio
ADMIXTURES:	None

EFFECTIVE GAUGE LENGTH = 250 mm

	2/12/14	2/13/14	2/17/14		2/20/14		2/24/14		2/27/14	
	Initial	Zero	4 Days		7 Days		11 Days		14 Days	
Specimen	Comparator Reading	Comparator Reading	Comparator Reading	Length Change	Comparator Reading	Length Change	Comparator Reading	Length Change	Comparator Reading	Length Change
A	-0.342	-0.200	-0.162	0.02%	-0.148	0.02%	-0.104	0.04%	-0.058	0.06%
B	-0.030	0.114	0.146	0.01%	0.164	0.02%	0.204	0.04%	0.250	0.05%
C	-0.116	0.020	0.060	0.02%	0.068	0.02%	0.110	0.04%	0.158	0.06%
AVERAGE		-0.022	0.015	0.01%	0.028	0.02%	0.070	0.04%	0.117	0.06%

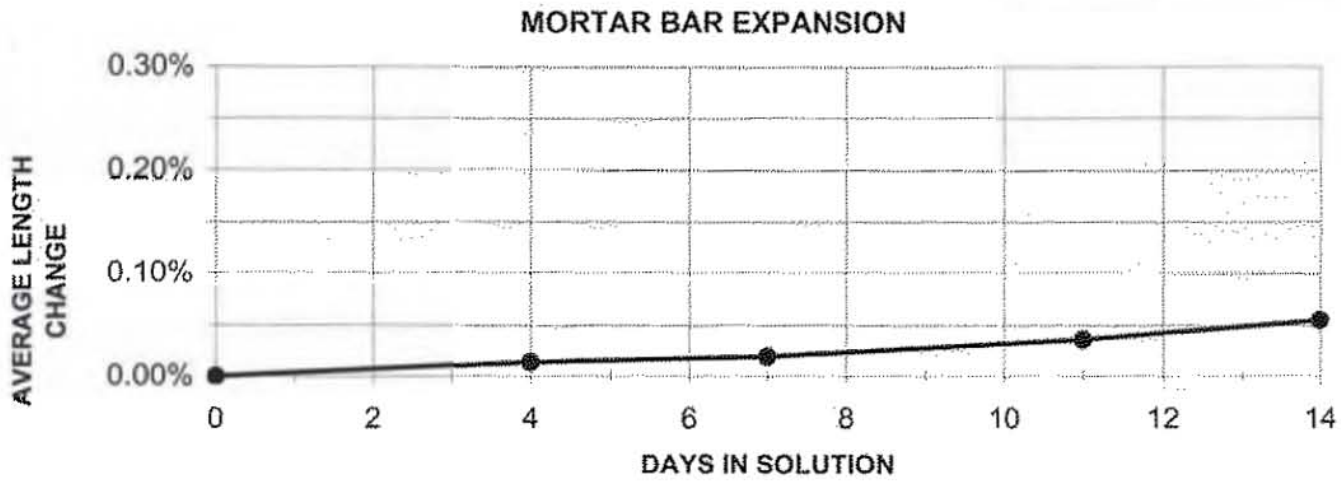

FIGURE 1

Sika Corporation
Construction

January 5, 2011

Aggregate Industries-West Central Region
1705 S. Acoma Street
Denver, CO 80223

Attn: Mr. Michael King
Email: Michael.King@aggregate-us.com

Re: Compatibility

Dear Mr. King,

Provided the chemical admixtures utilized by Aggregate Industries are discharged at different times during the weighing and batching process, the combination of Sika's admixtures should be highly effective with no chemical incompatibility. These products are to be discharged while water is present to allow for proper dispersion.

All recommendations as stated in the current Product Data Sheets issued for the materials must be followed. The website-sikaconstruction.com offers the current Product Data Sheets as well as other information.

We hope this is helpful.

Further concerns can be directed to your local Sika representative Bob Hall.

Regards,

Tom Zuppa

Tom Zuppa
Sr. Technical Service Manager
Construction Division

cc: Bob Hall-Sika Corporation

Sika Corporation, 201 Polito Avenue, Lyndhurst NJ 07071, USA
Tel: 201 933 8800, Fax: 201 933 6225, www.sikausa.com

Sika Corporation
Construction

January 25, 2013
Certificate of Compliance

Aggregate Industries
Denver, Colorado

Re: **Plastocrete 161**

This is to certify that **Plastocrete 161**, conforms to the current ASTM C 494 Types A, B and D and AASHTO M 194 Types A, B and D specifications. The typical chloride ion content of **Plastocrete 161**, based on all ingredients per its composition, is 234 ppm.

Palstocrete 161 is manufactured under quality control conditions by Sika Corporation. **Plastocrete 161** exhibits the typical physical properties as stated in the current data sheet for this product found at Sika's website www.sikaconstruction.com when used as directed within the product's shelf life for one year from the date of installation.
Always read the current applicable product data sheet, material safety data sheet and label prior to use.

Results may differ based upon statistical variations depending upon mix design, mixing methods and equipment, temperature, application methods, test methods, actual site conditions and curing conditions.

NO OTHER WARRANTIES, EXPRESSED OR IMPLIED, SHALL APPLY INCLUDING ANY WARRANTY OF MERCHANTIBILITY OR FITNESS FOR A PARTICULAR PURPOSE. SIKA SHALL NOT BE LIABLE UNDER ANY LEGAL THEORY FOR SPECIAL OR CONSEQUENTIAL DAMAGES OF ANY KIND. SIKA SHALL NOT BE RESPONSIBLE FOR THE USE OF THIS PRODUCT IN A MANNER TO INFRINGE ON ANY PATENT OR ANY OTHER INTELLECTUAL PROPERTY RIGHTS HELD BY OTHERS.

Sincerely,

SIKA CORPORATION

David White
Technical Services Director

cc: Ed Diaz-Sika Corporation

Sika Corporation, 201 Polito Avenue, Lyndhurst, NJ 07071
Tel: 800-933-7452, www.sikaconstruction.com

Innovation & Consistency | since 1910

Sika Corporation
Construction

January 25, 2013
Certificate of Compliance

Aggregate Industries
Denver, Colorado

Re: **Sika AIR**

This is to certify that **Sika AIR** conforms to the current ASTM C 260 and AASHTO M-154 specifications. The typical chloride ion content of **Sika AIR**, based on all ingredients per its composition, is 0.007%

Sika AIR is manufactured under quality control conditions by Sika Corporation. **Sika AIR** exhibits the typical physical properties as stated in the current data sheet for this product found at Sika's website www.sikaconstruction.com when used as directed within the product's shelf life for one year from the date of installation.
Always read the current applicable product data sheet, material safety data sheet and label prior to use.

Results may differ based upon statistical variations depending upon mix design, mixing methods and equipment, temperature, application methods, test methods, actual site conditions and curing conditions.

NO OTHER WARRANTIES, EXPRESSED OR IMPLIED, SHALL APPLY INCLUDING ANY WARRANTY OF MERCHANTIBILITY OR FITNESS FOR A PARTICULAR PURPOSE. SIKA SHALL NOT BE LIABLE UNDER ANY LEGAL THEORY FOR SPECIAL OR CONSEQUENTIAL DAMAGES OF ANY KIND. SIKA SHALL NOT BE RESPONSIBLE FOR THE USE OF THIS PRODUCT IN A MANNER TO INFRINGE ON ANY PATENT OR ANY OTHER INTELLECTUAL PROPERTY RIGHTS HELD BY OTHERS.

Sincerely,

SIKA CORPORATION

David White
Technical Services Director

cc: Ed Diaz, Sika Corp.

Sika Corporation, 201 Polito Avenue, Lyndhurst, NJ 07071
Tel: 800-933-7452, www.sikaconstruction.com

Innovation & Consistency | since 1910

BUILDING TRUST

Sika Corporation USA · 201 Polito Avenue · Lyndhurst, NJ 07071 · USA

Aggregate Industries
Denver, COI

CONTACT

Tom Zuppa
Sr. Technical Service Manager
Phone: 800-933-7452, ext. 5

Certificate of Compliance

Re: Sika CNI

March 11, 2014

This is to certify that **Sika CNI** conforms to the current ASTM C 1582 specifications.
The typical chloride ion content of the material, based on all ingredients per its composition, is 214 ppm.

Sika CNI is manufactured under quality control conditions by Sika Corporation.
Sika CNI exhibits the typical physical properties as stated in the current data sheet for this product found at Sika's website www.usa.sika.com when used as directed within the product's shelf life for one year from the date of installation. **Always read the current applicable product data sheet, material safety data sheet and label prior to use.**

Results may differ based upon statistical variations depending upon mix design, mixing methods and equipment, temperature, application methods, test methods, actual site conditions and curing conditions.

NO OTHER WARRANTIES EXPRESS OR IMPLIED, SHALL APPLY INCLUDING ANY WARRANTY OF MECHANTIBILITY OR FITNESS FOR A PARTICULAR PURPOSE. SIKA SHALL NOT BE LIABLE UNDER ANY LEGAL THEORY FOR SPECIAL OR CONSEQENTIAL DAMAGES OF ANY KIND. SIKA SHALL NOT BE RESPONSIBLE FOR THE USE OF THIS PRODUCT IN A MANNER TO INFRINGE ON ANY PATENT OR ANY OTHER INTELLECTUAL PROPERTY RIGHTS HELD BY OTHERS.

Sincerely,

David White
Vice President Technical Services

BUILDING TRUST

Sika Corporation USA · 201 Polito Avenue · Lyndhurst, NJ 07071 · USA

Aggregate Industries
Denver, CO

CONTACT

Tom Zuppa
Sr. Technical Service Manager
Phone: 800-933-7452, ext. 5

Certificate of Compliance

Re: Sika ViscoCrete 2100

March 11, 2014

This is to certify that **Sika ViscoCrete-2100** conforms to the current ASTM C 494 Types A and F and AASHTO M-194 Types A and F specifications. The typical chloride ion content of the material, based on all ingredients per its composition, is 10 ppm.

Sika ViscoCrete 2100 is manufactured under quality control conditions by Sika Corporation.
Sika ViscoCrete 2100 exhibits the typical physical properties as stated in the current data sheet for this product found at Sika's website www.usa.sika.com when used as directed within the product's shelf life for one year from the date of installation. **Always read the current applicable product data sheet, material safety data sheet and label prior to use.**

Results may differ based upon statistical variations depending upon mix design, mixing methods and equipment, temperature, application methods, test methods, actual site conditions and curing conditions.

NO OTHER WARRANTIES EXPRESS OR IMPLIED, SHALL APPLY INCLUDING ANY WARRANTY OF MECHANTIBILITY OR FITNESS FOR A PARTICULAR PURPOSE. SIKA SHALL NOT BE LIABLE UNDER ANY LEGAL THEORY FOR SPECIAL OR CONSEQENTIAL DAMAGES OF ANY KIND. SIKA SHALL NOT BE RESPONSIBLE FOR THE USE OF THIS PRODUCT IN A MANNER TO INFRINGE ON ANY PATENT OR ANY OTHER INTELLECTUAL PROPERTY RIGHTS HELD BY OTHERS.

Sincerely,

David White
Vice President Technical Services

BUILDING TRUST

Sika Corporation USA · 201 Polito Avenue · Lyndhurst, NJ 07071 · USA

Aggregate Industries
Denver, CO

CONTACT

Tom Zuppa
Sr. Technical Service Manager
Phone: 800-933-7452, ext. 5

Certificate of Compliance

Re: SikaTard 440

March 11, 2014

This is to certify that **SikaTard 440** conforms to the current ASTM C 494 Types B specification.
The typical chloride ion content of the material, based on all ingredients per its composition, is 87 ppm.

SikaTard 440 is manufactured under quality control conditions by Sika Corporation.
SikaTard 440 exhibits the typical physical properties as stated in the current data sheet for this product found at Sika's website www.usa.sika.com when used as directed within the product's shelf life for one year from the date of installation. **Always read the current applicable product data sheet, material safety data sheet and label prior to use.**

Results may differ based upon statistical variations depending upon mix design, mixing methods and equipment, temperature, application methods, test methods, actual site conditions and curing conditions.

NO OTHER WARRANTIES EXPRESS OR IMPLIED, SHALL APPLY INCLUDING ANY WARRANTY OF MECHANTIBILITY OR FITNESS FOR A PARTICULAR PURPOSE. SIKA SHALL NOT BE LIABLE UNDER ANY LEGAL THEORY FOR SPECIAL OR CONSEQENTIAL DAMAGES OF ANY KIND. SIKA SHALL NOT BE RESPONSIBLE FOR THE USE OF THIS PRODUCT IN A MANNER TO INFRINGE ON ANY PATENT OR ANY OTHER INTELLECTUAL PROPERTY RIGHTS HELD BY OTHERS.

Sincerely,

David White
Vice President Technical Services

RELEASED FOR CONSTRUCTION
R. Watt 5-13-13

PROFESSIONAL LICENSE SEALS

COLORADO LICENSED
DOUGLAS WALLOCK
33104
5/8/2013
PROFESSIONAL ENGINEER

Specifications covered by this seal

32 31 00	Fences and Gates

RELEASED FOR CONSTRUCTION
K. Watt 5-13-13

PAGE INTENTIONALLY LEFT BLANK

RELEASED FOR CONSTRUCTION
K. Watt 5-13-13

Technical Specifications

SECTION 32 31 00
FENCES AND GATES

PART 1 GENERAL

1.1 DESCRIPTION

A. This section specifies providing chain link fencing and gates.

B. Related Sections:

1. SECTION 26 04 99 – BASIC ELECTRICAL REQUIREMENTS

2. SECTION 26 05 19 – LOW-VOLTAGE ELECTRICAL POWER CONDUCTORS AND CABLES.

3. SECTION 26 05 27 – GROUNDING AND BONDING FOR ELECTRICAL SYSTEMS.

1.2 REFERENCED STANDARDS

A. Standard Specifications for Road and Bridge Construction by the Colorado Department of Transportation (CDOT), 2011 Edition, Section 607-Fences and all referenced subsections contained therein unless superseded by this Section. Subsection 607.04 and 607.05 are hereby deleted.

B. AASHTO American Association of State and Highway Transportation Officials

1. AASHTO M 181-10 - Standard Specification for Chain-Link Fence

C. ASTM International (formerly known as American Society for Testing and Materials) (ASTM):

1. ASTM A121-99(2004) - Metallic-Coated Carbon Steel Barbed Wire.

2. ASTM A123/A123M-02 - Zinc (Hot-Dip Galvanized) Coatings on Iron and Steel Products.

3. ASTM A392-07 - Zinc-Coated Steel Chain-Link Fence Fabric.

4. ASTM A413/A413M-01 - Carbon Steel Chain.

5. ASTM A491-03 - Aluminum-Coated Steel Chain-Link Fence Fabric.

6. ASTM A780-01(2006) - Standard Practice for Repair of Damaged and Uncoated Areas of Hot-Dip Galvanized Coatings.

7. ASTM B3-01(2007) - Soft or Annealed Copper Wire.

8. ASTM B187B187M-06 -Copper, Bus Bar, Rod and Shapes and General-Purpose Rod, Bar, and Shapes.

9. ASTM B221-06 - Aluminum and Aluminum-Alloy Extruded Bars, Rods, Wire, Profiles, and Tubes.

10. ASTM F567-07 - Standard Practice for Installation of Chain-Link Fence.

11. ASTM F626-96a(2003) - Fence Fittings.

RELEASED FOR CONSTRUCTION
K. Watt 5-13-13

12. ASTM F668-06 - Polyvinyl Chloride (PVC) and Other Organic Polymer-Coated Steel Chain-Link Fence Fabric.

13. ASTM F900-05 - Industrial and Commercial Swing Gates.

14. ASTM F1043-06 - Strength and Protective Coatings on Steel Industrial Chain Link Fence Framework.

15. ASTM F1083-06 - Pipe, Steel, Hot-Dipped Zinc-Coated (Galvanized) Welded, for Fence Structures.

16. ASTM F1145-05 - Turnbuckles, Swaged, Welded, Forged.

17. ASTM F1184-05 - Industrial and Commercial Horizontal Slide Gates.

B. American Welding Society (AWS):

1. AWS D1.1/D1.1M - Structural Welding Code Steel

C. Military Specification (MIL):

1. MIL-P-21035 - Paint High Zinc Dust Content, Galvanizing Repair (Metric).

2. MIL-PRF-26915 - Primer Coating, for Steel Surfaces.

D. The Society for Protective Coatings (Formerly known as Steel Structures Painting Council) (SSPC):

1. SSPC Paint 20 - Zinc-Rich Primers (Type I, "Inorganic," and Type II, "Organic").

E. National Fire Protection Association (NFPA):

1. NFPA 70 - National Electrical Code (NEC).

1.3 SUBMITTALS

A. Shop Drawings:

1. Site plan with fence showing physical breaks at intervals as directed, and locations of bracing, gates, ground rods, depression closures, and other special fence construction.

2. Details of gates, gate post foundations, depression closures, and other special construction showing fabrication and installation.

3. Details for installation of accessories.

B. Certification: Submit certification of all materials to be used.

C. Product Data:

1. Exothermic welding process, materials, and molds.

2. Ground conductors.

3. Connector, bushing, and fittings.

4. Ground rods.

D. The Contractor shall submit test reports for approval in accordance with the requirements of SECTIONS 26 04 99 - BASIC ELECTRICAL REQUIREMENTS.

RELEASED FOR CONSTRUCTION
K Watt 5-13-13

1.4 JOB CONDITIONS

A. Right of Access to Adjacent Private Property: As indicated in the Contract Documents.

1.5 EXTRA MATERIALS

A. Deliver extra materials described below that match products installed, are packaged with protective covering for storage, and are identified with labels describing contents to Engineer.

1. ABLOY Locks and Knox Padlocks: Ten percent of amount installed of each.

PART 2 PRODUCTS

2.1 FENCE FABRIC

A. Steel: Hot-dip galvanized after weaving, ASTM A392; Class 1 coating, 3/8-inch or two-inch mesh, as indicated in Contract Documents, No. 9 gauge wire, height shown, selvage twisted and barbed at top and bottom.

B. Aluminum: Aluminum alloy fabric woven from 9 gauge wire, conforming to ASTM A491. Minimum tensile strength after weaving 1560 pounds with 3/8-inch or two-inch mesh, as indicated in Contract Documents, selvage twisted and barbed at top and bottom.

C. Polyvinyl chloride- (PVC-) coated steel fabric, ASTM F668, Class 2b, with 9 gauge wire, 3/8-inch or two-inch mesh, as indicated in Contract Documents, selvage twisted and barbed at top and bottom. Color to be black.

2.2 POSTS, GATES, TENSION WIRE, AND BRACES

A. Posts: Pipe used for posts shall conform to AASHTO M 181 Grade 1 or 2. Posts shall be fitted with watertight malleable iron caps. Provide 11 gage minimum fabric tie wire spaced at 14-inch centers.

B. Tension Wire: To be used in lieu of a top rail. Tension wire shall also be used at the bottom of the fence. Tension wire finish to match fabric, either zinc-coated steel, aluminum-coated steel, or polyvinyl chloride over zinc-coated steel. All tension wire shall be 7 gauge wire size with an outside diameter of 0.177-inch.

1. Steel Wire: Steel tension wire shall be marcelled or crimped coil spring hard-tempered carbon steel wire. The tension wire shall have a minimum strength of 75,000 psi. Zinc-coated steel shall have not less than 1.2 ounces of zinc per square foot of coated surface area. Aluminum-coated steel shall have not less 0.40 ounces of aluminum per square foot of coated surface area. PVC-coated wire shall have a minimum coating thickness of 0.007 inch.

C. Gates shall comply with ASTM F900 and ASTM F1184. Gate frame including top rail, bottom rail, braces, supports, and similar members shall be made of aluminum alloy 6063-T6 (in accordance with ASTM B221) or galvanized steel pipe, unless shown otherwise. Gate materials to match fence in which installed.

1. Gate Hardware: Furnish a malleable iron ball and socket bottom hinge and a 180-degree wrap-around-type top hinge to allow gate to swing 90 degrees or 180 degrees. Provide a padlocking device, center rests and semi-automatic catch to secure driveway gates in open position.

D. Galvanized Steel Gates:

RELEASED FOR CONSTRUCTION
R. Watt 5-13-13

1. Frames: Furnish two-inch outside diameter galvanized pipe with pressed steel on malleable iron corner ells, securely riveted with four rivets per corner, or welded corners hot-dipped after fabrication.

2. Internal Bracing: Provide 1-5/8-inch outside diameter pipe brace and 2-3/8-inch adjustable truss rods.

E. Where vinyl- (PVC-) coated posts, rails, braces and accessories are identified in the drawings, the material shall be PVC-coated galvanized products in accordance with ASTM F668, Type 2b and ASTM F1043. Color to be black.

2.3 ACCESSORIES

A. Hot-dip galvanized, in accordance with ASTM A123 and F626, Class 40.

B. Wire ties: Fabric: No. 9 gauge or double strands of No. 13 gauge steel.

C. Tension wire: No. 7 gauge steel.

D. Turnbuckle: ASTM F1145, Type 1, Form 1, Class 8, Size 3/8 by six, hexagonal heads, UNC threads, hot-dip galvanized.

E. Pipe sleeves for fence on retaining walls: Four-inch diameter standard weight pipe sleeve, hot-dip galvanized, one foot long, and centered in wall.

F. Fence fittings in accordance with ASTM F626.

G. Where vinyl- (PVC-) coated chain link fence is shown on the Contract Documents, accessories shall be PVC-coated galvanized products in accordance with ASTM F668, Type 2b and ASTM F1043. Color to be black.

2.4 BARBED WIRE

A. In accordance with ASTM A121, 12-1/2 gauge steel wire with 14 gauge four-point round barbs, five inches on center.

2.5 CONCRETE AND GROUT

A. Concrete: Minimum compressive strength at 28 days of 3000 psi, using one-inch maximum size aggregate and five sacks of cement minimum per cubic yard, with a maximum slump of four inches. Concrete materials shall conform to the applicable requirements.

B. Grout: Structural Non-Shrink as specified in SECTION 03 31 33 - STRUCTURAL CONCRETE.

2.6 MISCELLANEOUS MATERIALS

A. Galvanizing Repair Paint:

1. For Concealed or Top Coated Surfaces:

a. Organic zinc-rich coating containing at least 65 percent metallic zinc, by weight in dry film and meeting performance requirements of:

1) ASTM A780.

2) SSPC-Paint 20.

2. For Surfaces to be Left Exposed:

RELEASED FOR CONSTRUCTION
R. Watt 5-13-13

a. In addition to requirements for concealed and top coated surfaces, match aesthetic appearance of hot-dip galvanizing and meet performance requirements of:

1) MIL-P-21035.

2) MIL-PRF-26915.

b. Basis-of-Design: Brite Products “Brite Zinc’’.

2.7 CHAIN

A. In accordance with ASTM A413, Class Grade 43, case-hardened carbon-steel security chain, 3/8-inch diameter by 24 inches long for all gates.

2.8 LOCKING SYSTEM

A. Latch: Fabricate gates as required to receive latching device.

1. Provide fork latch at single swing gates.

2. Double swing gates latch: Drop rod assembly full height of gate, to engage stop at double gates, hot dip galvanized.

3. Latch shall be approved gate lock box, to accept padlocks specified.

B. Each gate shall have ABLOY lock (no substitution) and Knox Padlock (no substitution). Coordinate with the Engineer on keying of ABLOY locks and supplying Knox locks.

2.9 GROUNDING SYSTEM

A. In accordance with SECTION 26 05 27 - GROUNDING AND BONDING FOR ELECTRICAL SYSTEM.

2.10 FABRICATION

A. Perform welding in accordance with requirements of AWS D1.1/D1.1M.

B. Gates: Materials to match fence in which installed.

PART 3 EXECUTION

3.1 FENCE INSTALLATION

A. Construct fence as shown on CDOT Standard Plan M-607-2 except as shown on the plans or described in this specification.

B. Perform necessary clearing, grubbing, excavation, and filling to provide clear line-of-fence runs. Do not begin fence installation until final grading along fence line is complete.

C. Set posts in concrete footings, sized as shown.

D. Handling and placing of concrete shall conform to the applicable requirements of SECTION 03 31 33 - STRUCTURAL CONCRETE.

E. Extend concrete to two inches above ground line at posts, and slope top of concrete to drain away from posts.

F. Space posts at ten feet maximum and eight feet minimum on centers. Place additional posts at each abrupt change in grade, and at breakpoints.

RELEASED FOR CONSTRUCTION
R. Watt 5-13-13

G. Where rock is encountered, drill holes two inches deeper than depth shown and two inches greater than outside diameter of post. After post is placed and supported as shown and specified, fill remaining void with one-to-three grout mixture of cement and sand.

H. Where fence is located on concrete structure, embed 12-inch length of closed-bottom steel pipe sleeve having inside diameter two inches greater than outside diameter of fence posts, spaced as shown on approved shop drawings. Fill void around fence posts with non-shrink grout.

I. Space pull posts at approximately 500-foot intervals for straight runs and at each vertical angle point. Install corner posts at each horizontal angle point. Provide corner, end and pull posts with horizontal braces and tie rods on each side of posts extending to and connecting to adjacent line posts.

J. After posts are installed, install tension wire and securely anchor at ends and to line posts before hanging fabric.

K. Secure ends of fabric by tension bars threaded through loops in fabric and secured to posts by bands with bolts and nuts or other approved devices.

L. Attach fabric outside framing system, away from project property. Stretch fabric by securing one end and applying sufficient tension by mechanical fence stretchers. Fasten fabric to line posts, tension wire and top railing with tie wires at spacing shown.

M. Hold bottom of fabric as uniformly as possible to, but in no case to exceed two inches above finished grade.

N. Provide barbed wire where shown. Install support arms at 45 degrees upward and outward from RTD's property; extend corner, gate and end posts as shown. Stretch barbed wire to remove kinks and sags and secure to bracket arms, using tension bands for attachment to posts.

O. Install gates and gate stops as shown.

P. Set gate stops in concrete accurately so that drop rod can be fully engaged.

Q. Furnish one chain with one Abloy lock and one Knox padlock for each gate. Tack-weld chain to gate to prevent loss or theft.

R. Install pipe sleeve and bottom eye bolt as shown on the Standard Drawings and in accordance with this section.

3.2 GROUNDING

A. Along-Track Fence and Gate Grounding.

1. All metallic fences within 15 feet of centerline of the nearest rail shall be resistance tested to earth ground. Any fence exceeding 25 ohms to earth ground shall have additional grounds installed, as per this specification.

   a. If the fence section to earth ground resistance is above 25 ohms, a ground rod shall be installed 2 feet from the first fence end post. A 2/0 AWG copper conductor shall be connected to the ground rod and then connected to the fence end post. The post connection shall be 6 inches above finished grade. Fence sections shall be tested every 400 feet to ensure that each fence section is 25 ohms or less to earth ground. From each fence section to the next 400-foot test (or next end post), a continuity test shall be performed to confirm the fence is electrically continuous.

RELEASED FOR CONSTRUCTION
K. Watt 5-13-13

b. If the fence section is less than 400 feet and its earth ground resistance is above 25 ohms, a ground rod shall be installed 2 feet from the first and last fence post. A 2/0 AWG copper conductor shall be connected to each ground rod and then connected to the fence post. The post connection shall be 6 inches above finished grade. A continuity test shall be performed to confirm the fence is electrically continuous.

2. Ground rods shall be driven vertically with rod top a minimum of 6 inches below top of ballast or finished grade.

3. Unless otherwise indicated, all underground grounding connections shall be by exothermic welding or permanent connections. Grounding connections shall not be soldered.

4. A flexible copper braided strap shall be securely connected from each gate post to the gate frame rail, on hinge side only. The gate frame rail connection shall be made at the bottom rail. A buried 2/0 AWG conductor shall be bonded fro the gate post to the other side of gate to ensure electrical continuity of the fence through the gate.

5. Oxide inhibiting compound shall be used for all mechanical connections where copper to aluminum or copper to steel connections are made. The compound shall be applied to all surfaces of all copper, aluminum, and steel parts. In addition, all aluminum contact surfaces shall be abraded after application of the compound, and before attachment of the bolted connection.

B. Fence Sections Underneath Overhead Electric Line Crossings.

1. If the fence crosses underneath an overhead electric line, construct a 150-foot section of fence that is electrically isolated from the remaining sections of the fence. The section may be isolated by leaving a 4” gap between posts at the ends of the 150-foot section. Place grounding rods at each end and at the center of the section.

2. A continuity test shall be performed to confirm the fence is not electrically continuous through this section.

C. Ornamental Fence.

1. If an ornamental fence is located near a passenger station at the same elevation as the station, the station ground loop system shall be extended and bonded to the ornamental fence. The other end of the ornamental fence shall be bonded to a ground rod installed at the end of the fence. A continuity test shall be performed to confirm the fence is electrically continuous from end to end.

2. If an ornamental fence is located on top of a retaining wall, the ornamental fence shall be bonded to a ground rod installed at each end of the fence. A continuity test shall be performed to confirm the fence is eclectically continuous from end to end.

D. Exothermic Welding.

1. The surface to be welded shall be clean and dry. Wire brush or file the point of contact to a clean bare metal surface.

2. Use welding cartridges and molds for the required type of weld that are approved by the Engineer. Perform all welding in accordance with the manufacturer’s recommendations. Worn or damaged molds shall not be used.

3. After welds have been completed and cooled, brush slag from the weld area and thoroughly clean the joint.

4. Where exothermic grounding connections are made between copper wire and steel surfaces that are directly buried, coat the connection with a coal tar epoxy coating before

RELEASED FOR CONSTRUCTION
R. Watt 5-13-13

backfilling. Also, coat the entire area of the steel surface disturbed by the exothermic welding.

5. Unless otherwise indicated, use exothermic welding for all underground cable to cable splices, tees, crosses, etc., and all cable connections to ground rods, ground rod splices, steel and cast iron objects.

6. Test all welds by striking with a two pound steel hammer. Replace any defective welds and molds.

7. Where exothermic welds are made to a galvanized surface, remove the galvanized coasting using a grinding wheel to expose a clean bare metal surface. After welding, touch up the weld and surrounding metal surfaces with zinc rich primer that is approved by the Engineer.

E. Inspection and Test.

1. Perform ground resistance tests at beginning of every fence section and at 400 feet intervals, and of each completed ground system using a three-point method of measuring ground impedance (resistance). The resistance between each point shall be 40 feet. The fence to earth ground resistance shall not exceed 25 ohms. If resistance exceeds 25 ohms, ground rods shall be installed as necessary to achieve 25 ohms or less.

2. Perform insulation resistance (megger) test across each connection point where non-metallic fence section connects to a metallic fence section or confirm there is not electrical continuity and a minimum resistance of 500 ohms.

3. Submit all test reports.

3.3 ADJUSTING AND CLEANING

A. Remove and replace fencing which is improperly located and is not true to line and grade or is defective and remove and replace posts which are not plumb.

B. Galvanized Surfaces:

1. Clean field welds, bolted connections, and abraded areas and repair galvanizing to comply with ASTM A780.

2. For surfaces to be left exposed, apply galvanizing repair paint in at least two coats.

END OF SECTION

RELEASED FOR CONSTRUCTION
K. Watt 5-13-13

PAGE INTENTIONALLY LEFT BLANK

APPENDIX E

DTP SHOP DRAWINGS W/ PARTS QUANTITY AND MATERIAL INVENTORY LIST

Millage, Michael

From: Millage, Michael
Sent: Tuesday, July 30, 2019 3:59 PM
To: David Rausch; Lance Langan
Cc: Millage, Michael
Subject: Lowell Blvd Crossing Ped Treatment Material Delivery FW: Signed Adams County Transfer of Material.pdf
Attachments: Signed Adams County Transfer of Material.pdf

David and Lance

Attached is the signed transfer of Lowell Blvd crossing ped material delivered by DTP/DTO today July 30, 2019 at 1:30pm to the RTD KIK Building located at 4941 East 39th Avenue Denver Colorado. RTD will store this material at our KIK Building until such time when the Lowell Blvd project team is ready to pick it up. Please contact me when you are ready to pick up and I will ensure access to the building.

Thank You
Michael Millage
RTD-Eagle P3
NWES/GL-Eagle Construction Manager
michael.millage@rtd-denver.com
303-299-2897 (w)
719-325-9888 (c)

From: Robert Bohnet <Robert.Bohnet@dtpjv.com>
Sent: Tuesday, July 30, 2019 3:32 PM
To: Millage, Michael <Michael.Millage@RTD-Denver.com>
Cc: Peter Strange <Peter.Strange@dtpjv.com>
Subject: Signed Adams County Transfer of Material.pdf

Michael,

Please find attached the signed document as requested.

Regards,

Rob

Client: RTD
Project: Eagle Project
Project Location: Denver, Colorado

DENVER TRANSIT CONSTRUCTORS (DTC)

Part of the Denver Transit Partners (DTP) Team

TRANSFER OF MATERIALS (TOM)

FROM Denver Transit Constructors			
TO Adams County, Colorado			
SHIPPED VIA	**SIGNATURE**	**REPORT NUMBER**	0001
DTC			**SEQUENCE TOM** 0001

TOM ITEM NO.	PO NO. OR SMALL TOOL CLASS CODE	SIZE, COMMODITY CODE NO., & DESCRIPTION (Show Mfr. Catalog Number & Other Detail)	% USED OR NEW	NET PRICE PER UNIT	QTY	EXTENSION
0001	Drawings	Drawing Packages (800-808 & E800-E804)				
0002	✓	800A - Post with Base Plate and 5" Wing			2	
0003	✓	801A - Removable Post, No Base Plate			2	
0004	✓	802A – Post with Base Plate and 5" Wing			2	
0005	✓	803A – Post with Base Plate and 7" Wing			1	
0006	✓	804A – Post with Base Plate and 1'-9" Wing			1	
0007	✓	805A – Post with Base Plate and 7" Wing			1	
0008	✓	806A – Post with Base Plate and 1'-9" Wing			1	
0009	✓	807A – Gate – 3'-0"			3	
0010	✓	808A – Gate – 3"-0"			3	
0011	Seatype ✓	Tapered Shims (8 ea. type)			16	
0012	✓	Active Hinges (TOP HINGE - h807)			6	
0013		Passive Hinges (BOTTOM HINGE - j807)			6	
0014	✓	Rubber Stops			12	
0015	✓	Gate Stop Angles			6	

MATERIAL RECEIVED BY	DATE	CLIENT APPROVAL	DATE
Lance Slayer	7/30/19		

Copyright © 2016, Fluor Corporation. All Rights Reserved.

Client: RTD
Project: Eagle Project
Project Location: Denver, Colorado

DENVER TRANSIT CONSTRUCTORS (DTC)

Part of the Denver Transit Partners (DTP) Team

TRANSFER OF MATERIALS (TOM)

FROM Denver Transit Constructors			
TO Adams County, Colorado			
SHIPPED VIA	**SIGNATURE**	**REPORT NUMBER**	0002
DTC			**SEQUENCE TOM** 0001

TOM ITEM NO.	PO NO. OR SMALL TOOL CLASS CODE	SIZE, COMMODITY CODE NO., & DESCRIPTION (Show Mfr. Catalog Number & Other Detail)	% USED OR NEW	NET PRICE PER UNIT	QTY	EXTENSION
0016	✓	½" diameter Galvanized Nuts and Washers			32	
0017	✓	1/4 – 20 X 1" SS Flat Head Machine Screws (Spanner Drive) for Hinge Plates			24	
0018	✓	1/4 – 20 X 1" SS Pan Head Machine Screws (Spanner Drive) for Gate Stops and Rubber Bumpers			36	
0019	✓	2' X 5' Brick Red Truncated Domes			6	
0020	✓	"Pull to Open" Signs			6	
0021	✓	"Push to Open" Signs			6	
0022	✓	"Stop Here When Lights are Flashing" Left Hand			4	
0023	✓	"Stop Here When Lights are Flashing" Right Hand			4	

MATERIAL RECEIVED BY	DATE	CLIENT APPROVAL	DATE
Lance Lanyan	7/30/19		

Copyright © 2016, Fluor Corporation. All Rights Reserved.

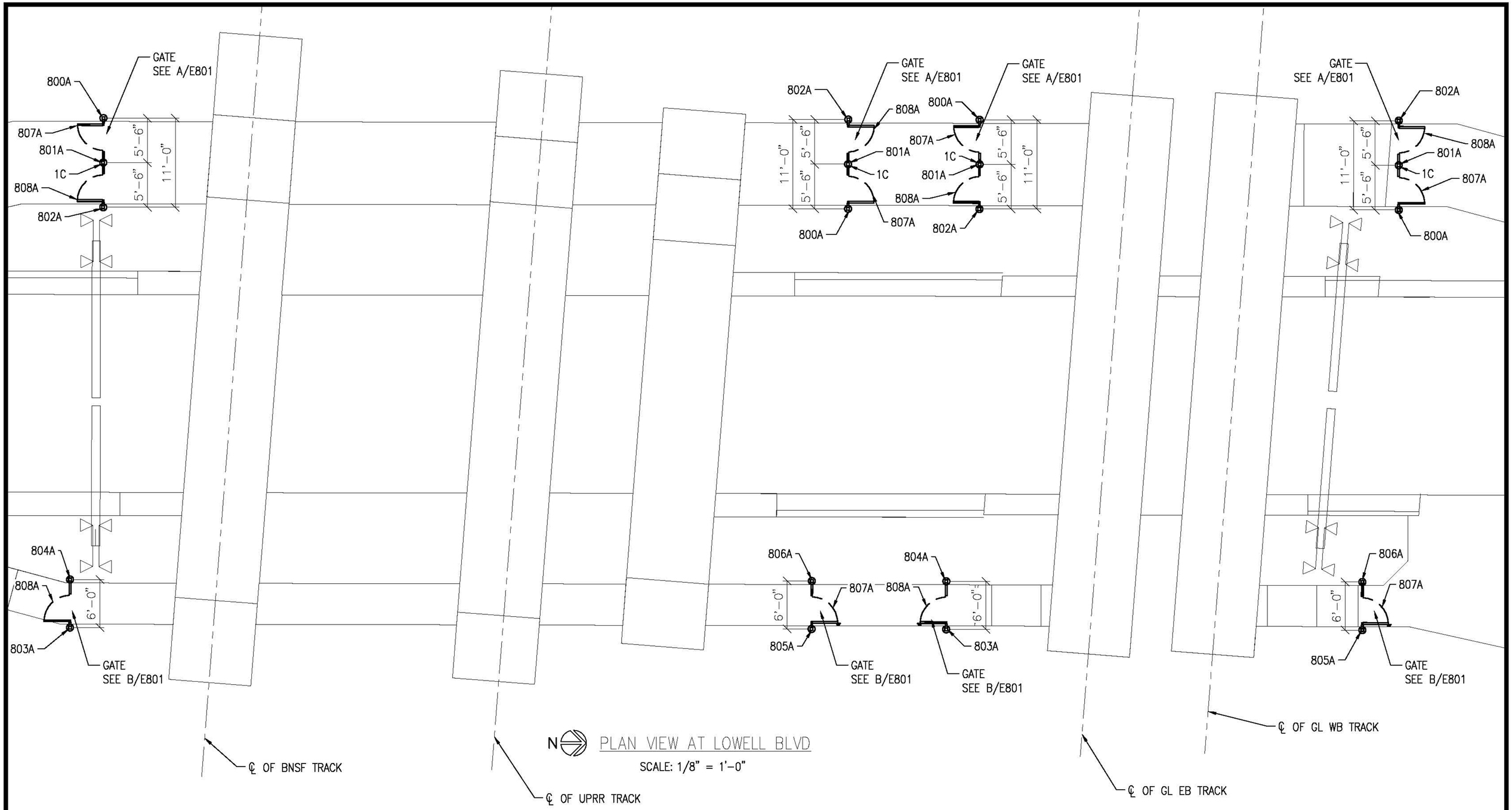

PLAN VIEW AT LOWELL BLVD

SCALE: 1/8" = 1'-0"

PAINT NOTE:
1) PAINT TO BE
A) SURFACE PREP: SSPC-SP6
B) PRIMER: CARBOLINE CARBOZINC 11
C) FINISH: CARBOLINE CARBOXANE 2000
D) FINISH COLOR TO BE FEDERAL STANDARD 595B #10049

REVISION	DATE	COMMENT	BY
1	9/16/16	ISSUED FOR CONSTRUCTION	RW
A	7/12/16	ISSUED FOR APPROVAL	RW

CES INC. CUTTING EDGE STEEL
101 MILLER DRIVE
DACONO, CO 80514
P 303-659-3180 F 303-659-3435

PROJECT	EAGLE P3
LOCATION	LOWELL BLVD.
DETAIL OF	PLAN VIEW AT LOWELL BLVD.
CONTRACTOR	DENVER TRANSIT CONSTRUCTORS
ARCHITECT	FHDR

HOLES	PAINT	DRAWN	CHECKED	SHEET #	JOB #
AS NOTED	SEE NOTE	RW	SG	E800	14-028-M45

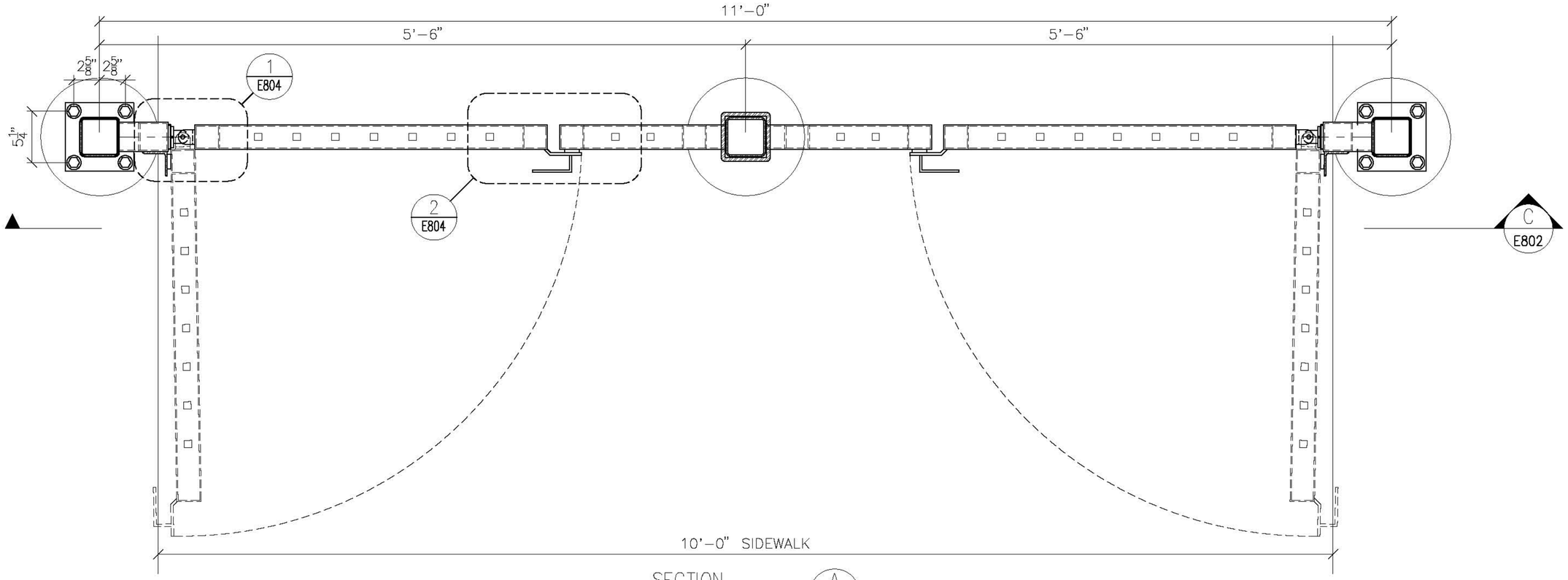

SECTION A E801

SCALE: 1 1/2"=1'-0"

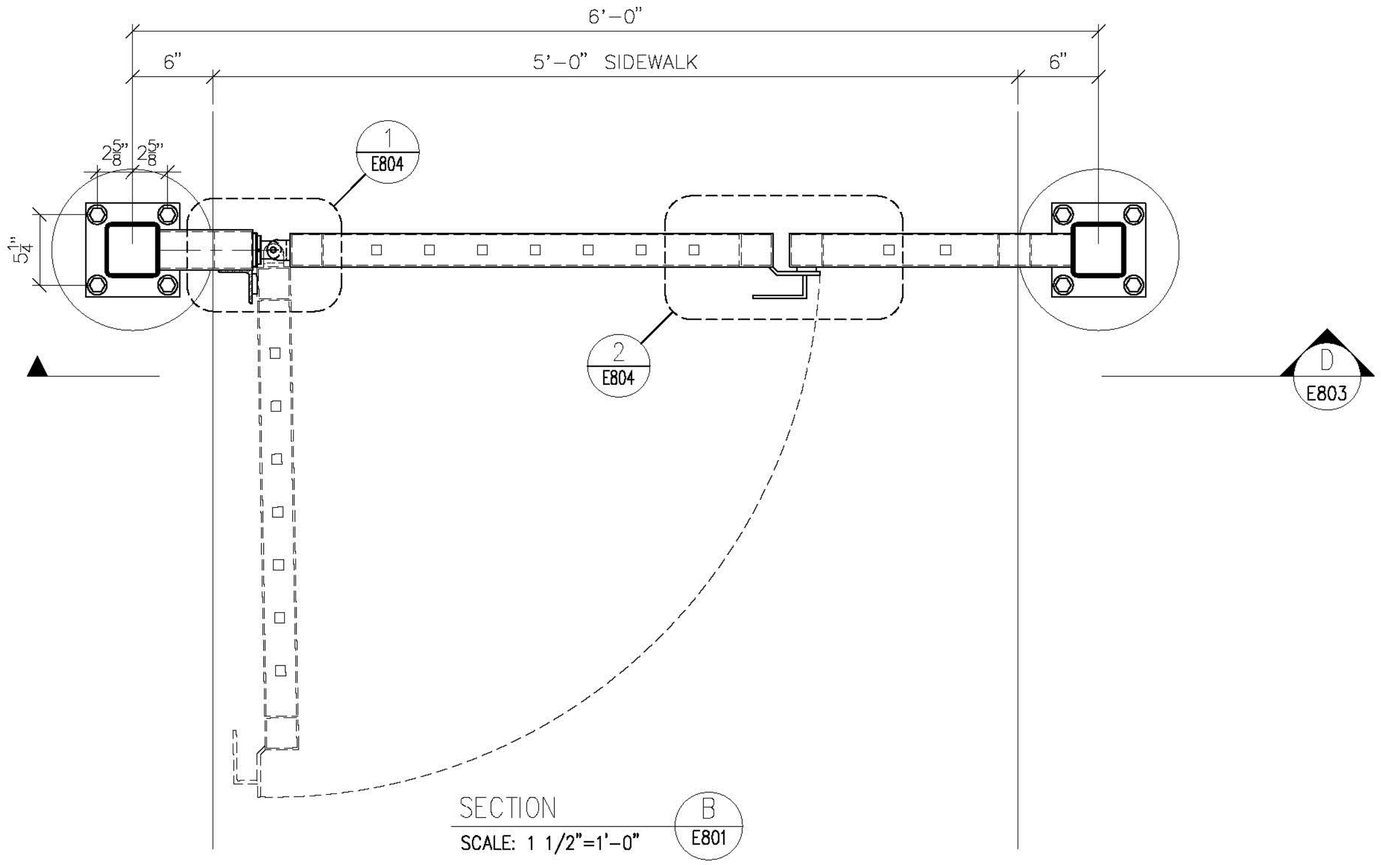

SECTION B E801

SCALE: 1 1/2"=1'-0"

PAINT NOTE:
1) PAINT TO BE
A) SURFACE PREP: SSPC-SP6
B) PRIMER: CARBOLINE CARBOZINC 11
C) FINISH: CARBOLINE CARBOXANE 2000
D) FINISH COLOR TO BE FEDERAL STANDARD 595B #10049

REVISION	DATE	COMMENT	BY
0	9/16/16	ISSUED FOR CONSTRUCTION	RW
A	7/12/16	ISSUED FOR APPROVAL	RW

CES INC. CUTTING EDGE STEEL
101 MILLER DRIVE
DACONO, CO 80514
P 303-659-3180 F 303-659-3435

PROJECT	EAGLE P3
LOCATION	LOWELL BLVD.
DETAIL OF	SECTION VIEWS
CONTRACTOR	DENVER TRANSIT CONSTRUCTORS
ARCHITECT	FHDR

HOLES	PAINT	DRAWN	CHECKED	SHEET #	JOB #
AS NOTED	SEE NOTE	RW	SG	E801	14-028-M45

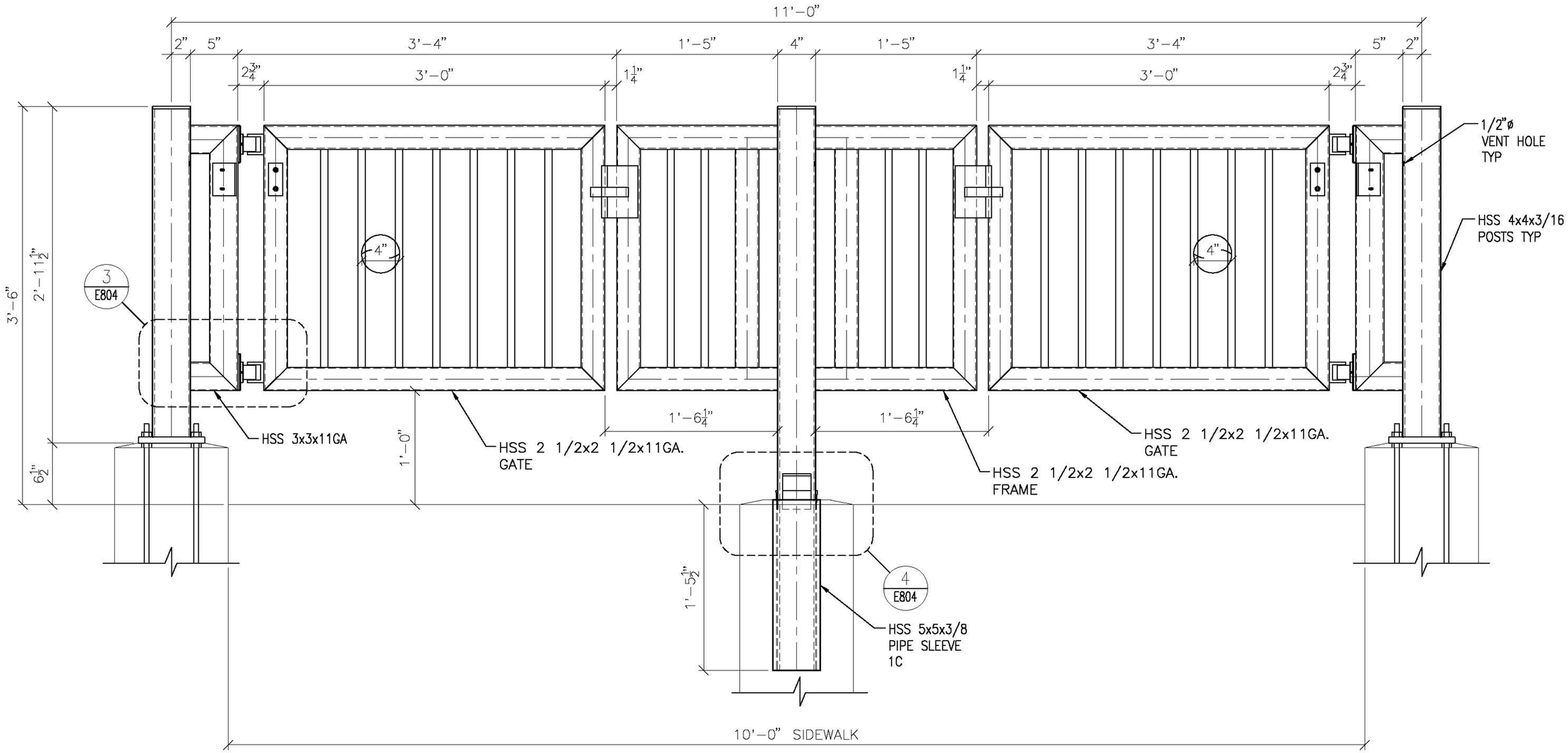

SECTION C E802

SCALE: 1 1/2"=1'-0"

PAINT NOTE:
1) PAINT TO BE
A) SURFACE PREP: SSPC-SP6
B) PRIMER: CARBOLINE CARBOZINC 11
C) FINISH: CARBOLINE CARBOXANE 2000
D) FINISH COLOR TO BE FEDERAL STANDARD 595B #10049

REVISION	DATE	COMMENT	BY
0	9/16/16	ISSUED FOR CONSTRUCTION	RW
A	7/12/16	ISSUED FOR APPROVAL	RW

CES INC. CUTTING EDGE STEEL
101 MILLER DRIVE
DACONO, CO 80514
P 303-659-3180 F 303-659-3435

PROJECT	EAGLE P3
LOCATION	LOWELL BLVD.
DETAIL OF	SECTION VIEWS
CONTRACTOR	DENVER TRANSIT CONSTRUCTORS
ARCHITECT	FHDR

HOLES	PAINT	DRAWN	CHECKED	SHEET #	JOB #
AS NOTED	SEE NOTE	RW	SG	E802	14-028-M45

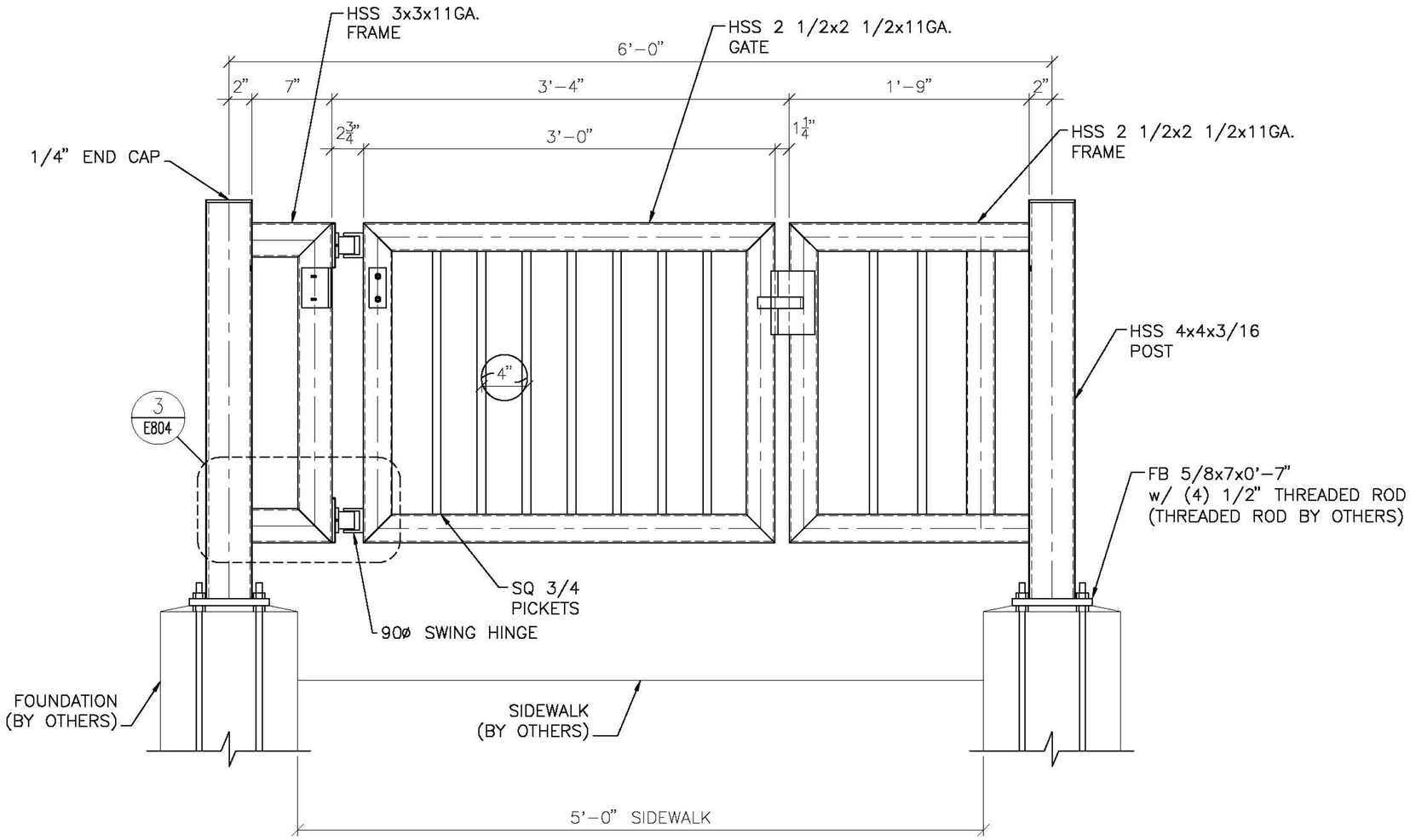

SECTION D / E803
SCALE: 1 1/2"=1'-0"

PAINT NOTE:
1) PAINT TO BE
A) SURFACE PREP: SSPC-SP6
B) PRIMER: CARBOLINE CARBOZINC 11
C) FINISH: CARBOLINE CARBOXANE 2000
D) FINISH COLOR TO BE FEDERAL STANDARD 595B #10049

REVISION	DATE	COMMENT	BY
1	9/16/16	ISSUED FOR CONSTRUCTION	RW
A	7/12/16	ISSUED FOR APPROVAL	RW

CES INC. CUTTING EDGE STEEL
101 MILLER DRIVE
DACONO, CO 80514
P 303-659-3180 F 303-659-3435

PROJECT	EAGLE P3
LOCATION	LOWELL BLVD.
DETAIL OF	SECTION VIEWS
CONTRACTOR	DENVER TRANSIT CONSTRUCTORS
ARCHITECT	FHDR

HOLES	PAINT	DRAWN	CHECKED	SHEET #	JOB #
AS NOTED	SEE NOTE	RW	SG	E803	14-028-M45

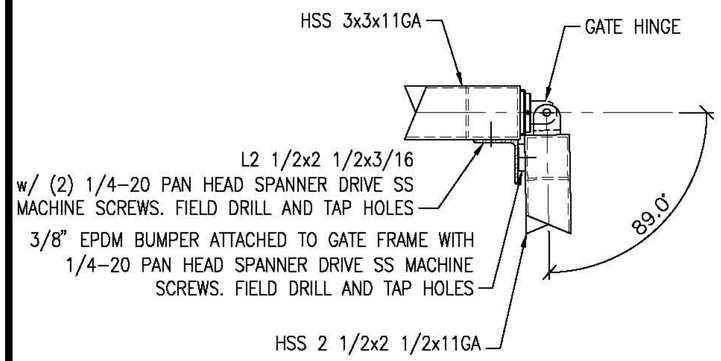

DETAIL 1 E804
SCALE: 2"=1'-0"

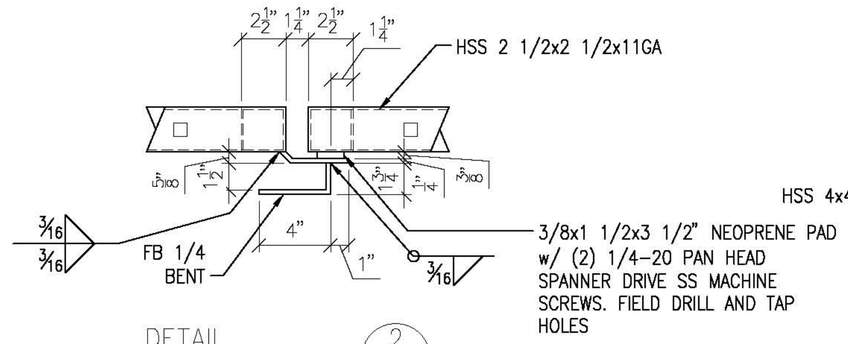

DETAIL 2 E804
SCALE: 2"=1'-0"

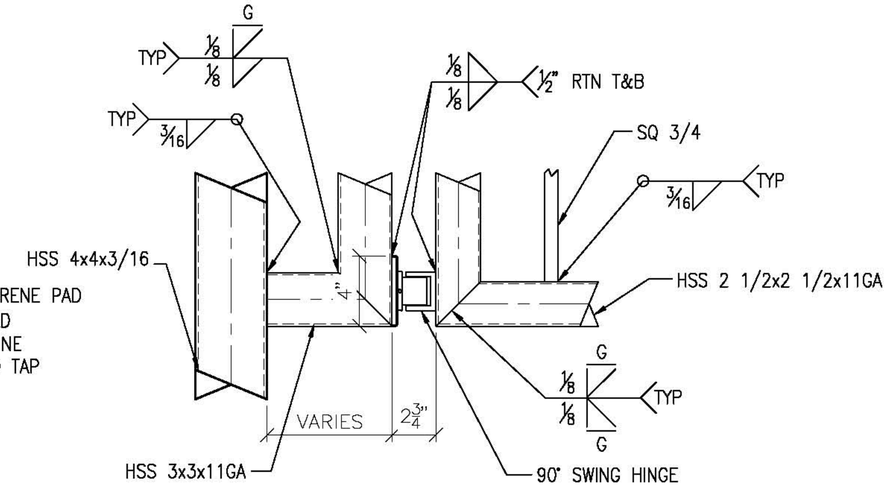

TOP HINGE = D&D TECHNOLOGIES SURECLOSE, STEEL MODEL NO. 75057124, TYPE 57SF W. CENTER MOUNTED WITH STEEL POST BRACKET MODEL NO. 7526 (W)
BOTTOM HINGE = D&D TECHNOLOGIES 75001114 HEAVY DUTY GATE HINGE SCREWED INTO 7512 MOUNTING PLATE. MOUNTING PLATE 7512 TO BE FIELD DRILLED AND TAPPED INTO FRAME WITH 1/4-20 SS FHMS THROUGH CTSK HOLES IN BRACKET

DETAIL 3 E804
SCALE: 2"=1'-0"

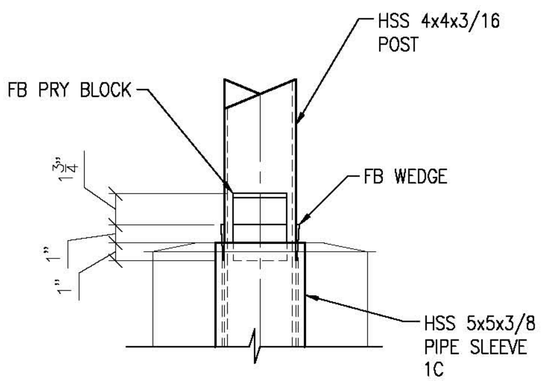

DETAIL 4 E804
SCALE: 2"=1'-0"

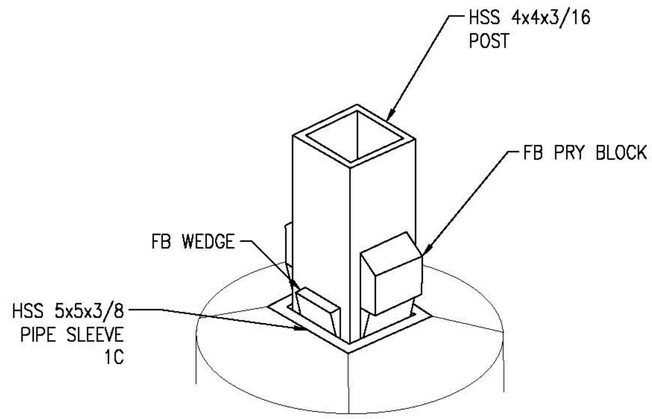

DETAIL 5 E804
SCALE: 2"=1'-0"

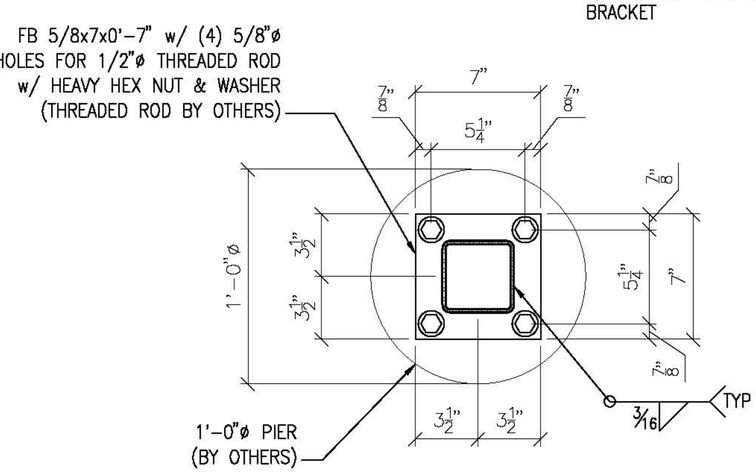

DETAIL 5 E804
SCALE: 2"=1'-0"

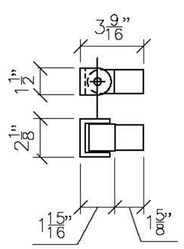

UPPER GATE HINGE
D&D TECHNOLOGIES
MODEL NO. 75057124
TYPE 57SF W.

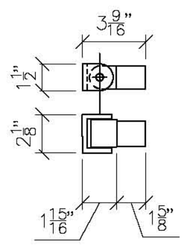

LOWER GATE HINGE
D&D TECHNOLOGIES
MODEL NO. 75001114
TYPE SM W.

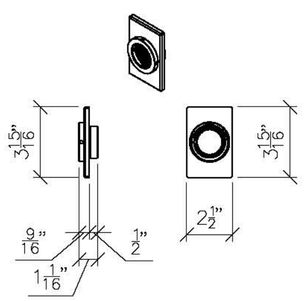

UPPER POST BRACKET
D&D TECHNOLOGIES
MODEL NO. 7526 (W)

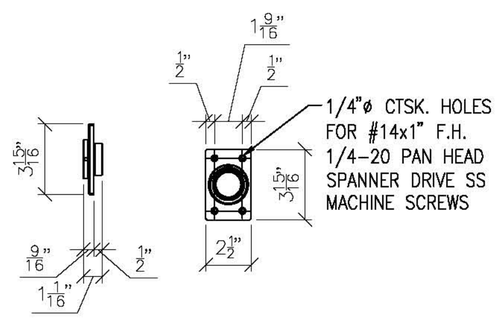

LOWER POST BRACKET
D&D TECHNOLOGIES
MODEL NO. 7515S

PAINT NOTE:
1) PAINT TO BE
A) SURFACE PREP: SSPC-SP6
B) PRIMER: CARBOLINE CARBOZINC 11
C) FINISH: CARBOLINE CARBOXANE 2000
D) FINISH COLOR TO BE FEDERAL STANDARD 595B #10049

REVISION	DATE	COMMENT	BY
1	9/16/16	ISSUED FOR CONSTRUCTION	RW
A	7/12/16	ISSUED FOR APPROVAL	RW

CES INC. CUTTING EDGE STEEL
101 MILLER DRIVE
DACONO, CO 80514
P 303-659-3180 F 303-659-3435

PROJECT	EAGLE P3
LOCATION	LOWELL BLVD.
DETAIL OF	DETAIL VIEWS
CONTRACTOR	DENVER TRANSIT CONSTRUCTORS
ARCHITECT	FHDR

HOLES	PAINT	DRAWN	CHECKED	SHEET #	JOB #
AS NOTED	SEE NOTE	RW	SG	E804	14-028-M45

UNIT QTY	QUANTITY	SHIPPING MARK	SUB PC MARK	DESCRIPTION	FEET	INCHES	REMARKS	GRADE
4		800A		POST				
	4		a800	HSS 4x4x3/16	2	10 5/8		A500B
	4		b800	FB 5/8x7	0	7		A36
	4		c800	HSS 3x3x11GA	2	4		A500B
	8		d800	HSS 3x3x11GA	0	5		A500B
	4		f800	L2 1/2x2 1/2x3/16	0	3 1/2		A36
	4		g800	FB 1/4x4	0	4		A36
	4		h800	POST BRACKET			D&D TECH 7526(W)	
12		800B		POST BRACKET			D&D TECH 7512S	
	56			MS ¼–20x1			SEE NOTE	

NOTE: MACHINE SCREWS TO BE PAN HEAD SPANNER DRIVE SS 18–8

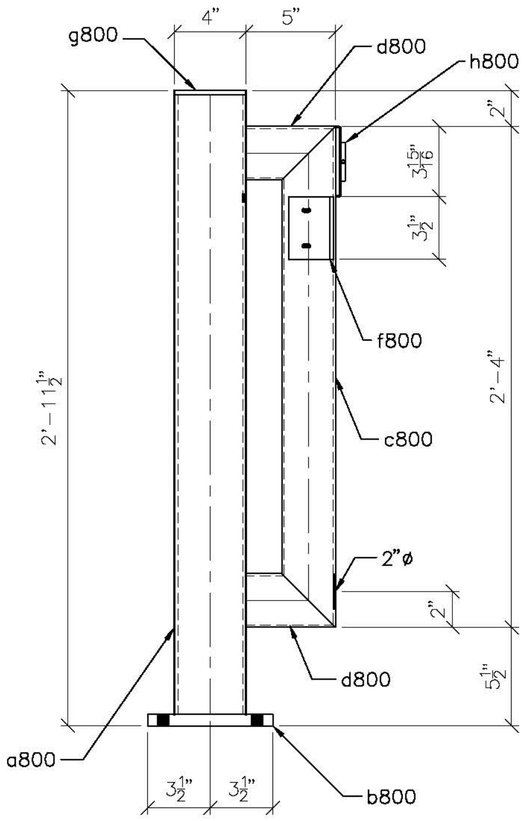

4 – 800A – POST

SCALE: 2" = 1'–0"

SHOP NOTE: PROVIDE WEEP HOLES FOR GALV.

PAINT NOTE:
1) PAINT TO BE
A) SURFACE PREP: SSPC–SP6
B) PRIMER: CARBOLINE CARBOZINC 11
C) FINISH: CARBOLINE CARBOXANE 2000
D) FINISH COLOR TO BE FEDERAL STANDARD 595B #10049

REVISION	DATE	COMMENT	BY
0	9/16/16	ISSUED FOR CONSTRUCTION	RW
A	7/12/16	ISSUED FOR APPROVAL	RW

CES (INC.) CUTTING EDGE STEEL
101 MILLER DRIVE
DACONO, CO 80514
P 303–659–3180 F 303–659–3435

PROJECT	EAGLE P3
LOCATION	LOWELL BLVD.
DETAIL OF	DETAIL VIEWS
CONTRACTOR	DENVER TRANSIT CONSTRUCTORS
ARCHITECT	FHDR

HOLES	PAINT	DRAWN	CHECKED	SHEET #	JOB #
AS NOTED	SEE NOTE	RW	SG	800	14–028–M45

UNIT QTY	QUANTITY	SHIPPING MARK	SUB PC MARK	DESCRIPTION	FEET	INCHES	REMARKS	GRADE
4		801A		POST				
	4		a801	HSS 4x4x3/16	4	11 1/4		A500B
	8		b801	HSS2 1/2x2 1/2x11GA	1	4		A500B
	4		c801	HSS2 1/2x2 1/2x11GA	2	4		A500B
	4		d801	HSS2 1/2x2 1/2x11GA	1	11		A500B
	8		f801	SQ 3/4	1	11		A36
	8		g801	EPDM 3/8x1 1/2	0	3 1/2	BUMPER	
	4		g800	FB 1/4x4	0	4		A36
	16			MS ¼–20x1			SEE NOTE	

NOTE: MACHINE SCREWS TO BE PAN HEAD SPANNER DRIVE SS 18–8

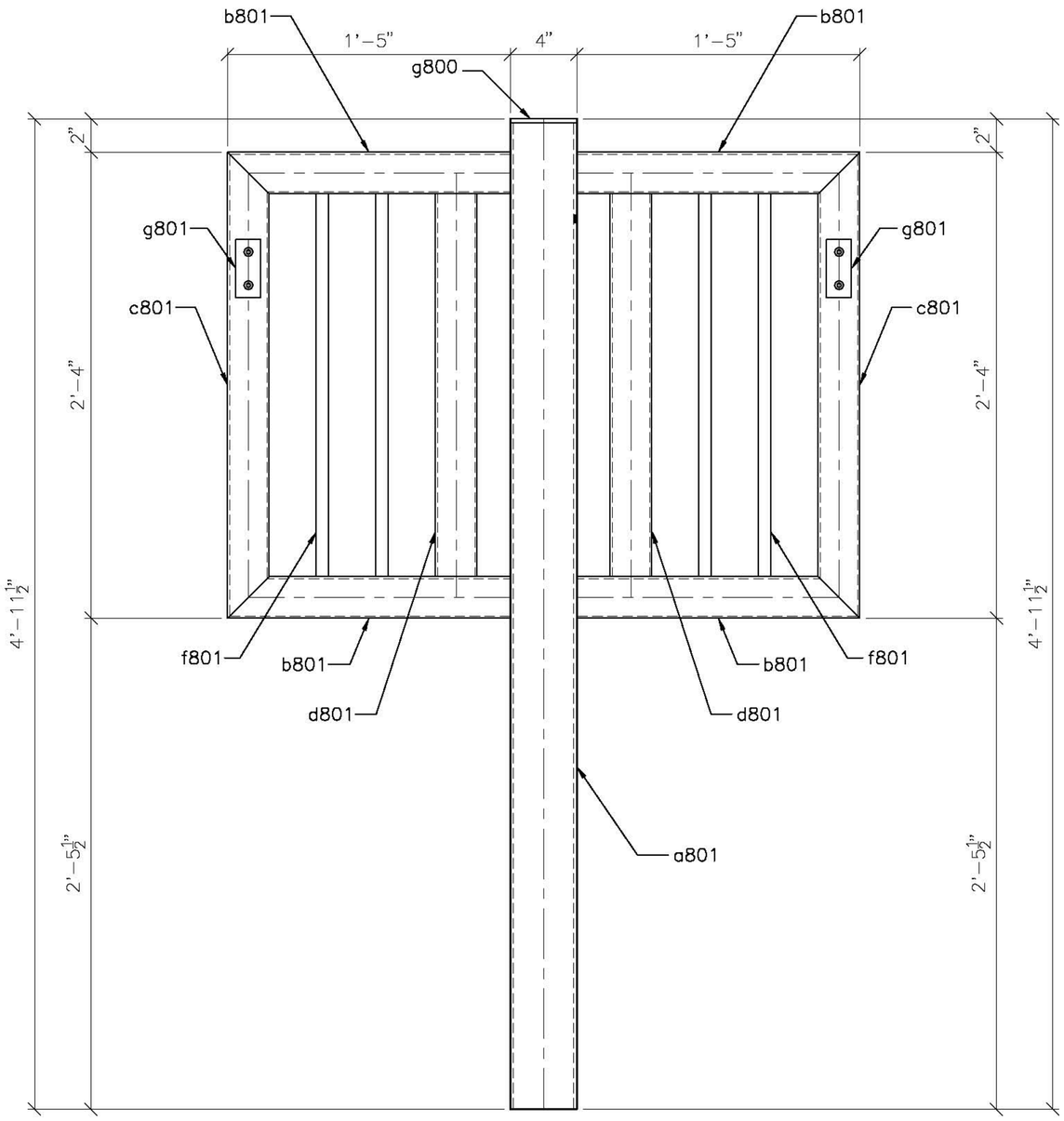

4 – 801A – POST

SCALE: 2" = 1'–0"

SHOP NOTE: PROVIDE WEEP HOLES FOR GALV.

PAINT NOTE:
1) PAINT TO BE
A) SURFACE PREP: SSPC–SP6
B) PRIMER: CARBOLINE CARBOZINC 11
C) FINISH: CARBOLINE CARBOXANE 2000
D) FINISH COLOR TO BE FEDERAL STANDARD 595B #10049

REVISION	DATE	COMMENT	BY
0	9/16/16	ISSUED FOR CONSTRUCTION	RW
A	7/12/16	ISSUED FOR APPROVAL	RW

CES INC. CUTTING EDGE STEEL
101 MILLER DRIVE
DACONO, CO 80514
P 303–659–3180 F 303–659–3435

PROJECT	EAGLE P3
LOCATION	LOWELL BLVD.
DETAIL OF	DETAIL VIEWS
CONTRACTOR	DENVER TRANSIT CONSTRUCTORS
ARCHITECT	FHDR

HOLES	PAINT	DRAWN	CHECKED	SHEET #	JOB #
AS NOTED	SEE NOTE	RW	SG	801	14–028–M45

UNIT QTY	QUANTITY	SHIPPING MARK	SUB PC MARK	DESCRIPTION	FEET	INCHES	REMARKS	GRADE
4		802A		POST				
	4		a800	HSS 4x4x3/16	2	10 5/8		A500B
	4		b800	FB 5/8x7	0	7		A36
	4		c800	HSS 3x3x11GA	2	4		A500B
	8		d800	HSS 3x3x11GA	0	5		A500B
	4		f800	L2 1/2x2 1/2x3/16	0	3 1/2		A36
	4		g800	FB 1/4x4	0	4		A36
	4		h800	POST BRACKET			D&D TECH 7526(W)	
	8			MS ¼–20x1			SEE NOTE	

NOTE: MACHINE SCREWS TO BE PAN HEAD SPANNER DRIVE SS 18–8

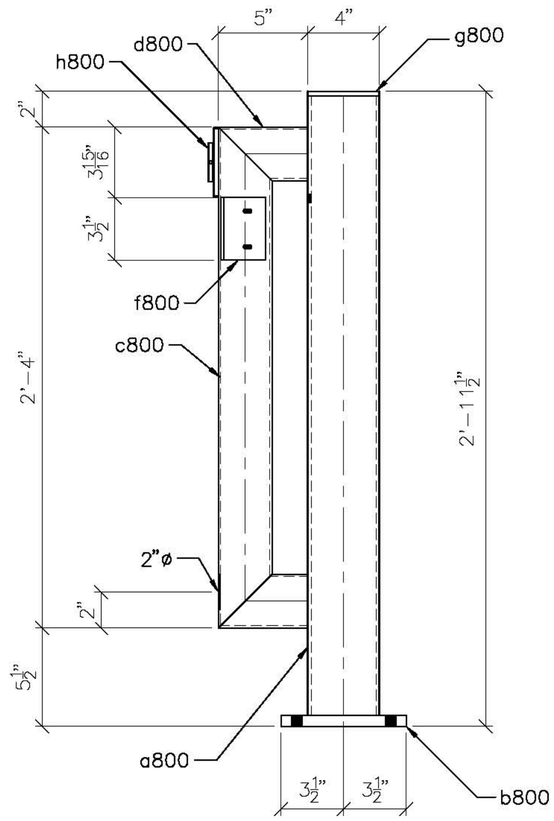

4 – 802A – POST

SCALE: 2" = 1'–0"

SHOP NOTE: PROVIDE WEEP HOLES FOR GALV.

PAINT NOTE:
1) PAINT TO BE
A) SURFACE PREP: SSPC–SP6
B) PRIMER: CARBOLINE CARBOZINC 11
C) FINISH: CARBOLINE CARBOXANE 2000
D) FINISH COLOR TO BE FEDERAL STANDARD 595B #10049

REVISION	DATE	COMMENT	BY
0	9/16/16	ISSUED FOR CONSTRUCTION	RW
A	7/12/16	ISSUED FOR APPROVAL	RW

CES INC. CUTTING EDGE STEEL
101 MILLER DRIVE
DACONO, CO 80514
P 303–659–3180 F 303–659–3435

PROJECT	EAGLE P3
LOCATION	LOWELL BLVD.
DETAIL OF	DETAIL VIEWS
CONTRACTOR	DENVER TRANSIT CONSTRUCTORS
ARCHITECT	FHDR

HOLES	PAINT	DRAWN	CHECKED	SHEET #	JOB #
AS NOTED	SEE NOTE	RW	SG	802	14–028–M45

UNIT QTY	QUANTITY	SHIPPING MARK	SUB PC MARK	DESCRIPTION	FEET	INCHES	REMARKS	GRADE
2		803A		POST				
	4		a803	HSS 3x3x11GA	0	7		A500B
	2		a800	HSS 4x4x3/16	2	10 5/8		A500B
	2		b800	FB 5/8x7	0	7		A36
	2		c800	HSS 3x3x11GA	2	4		A500B
	2		f800	L2 1/2x2 1/2x3/16	0	3 1/2		A36
	2		g800	FB 1/4x4	0	4		A36
	2		h800	POST BRACKET			D&D TECH 7526(W)	
	4			MS ¼–20x1			SEE NOTE	

NOTE: MACHINE SCREWS TO BE PAN HEAD SPANNER DRIVE SS 18–8

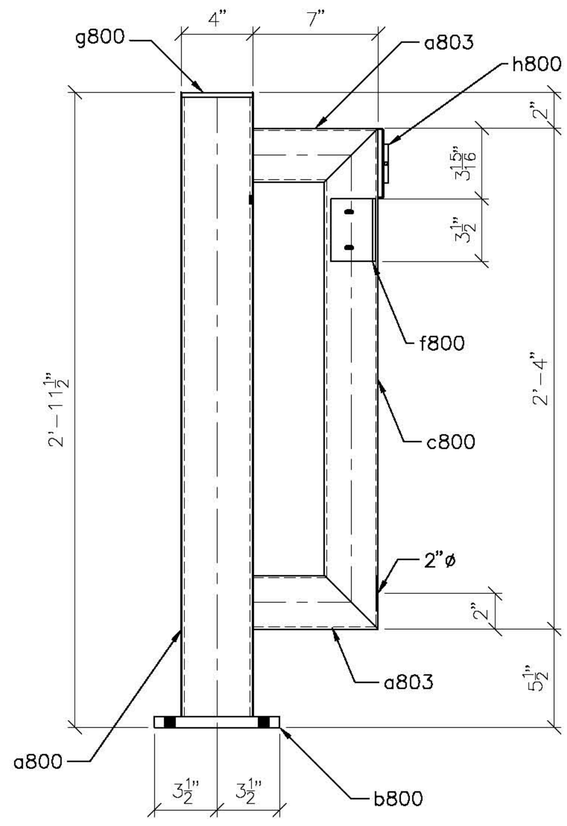

2 – 803A – POST

SCALE: 2" = 1'–0"

SHOP NOTE: PROVIDE WEEP HOLES FOR GALV.

PAINT NOTE:
1) PAINT TO BE
A) SURFACE PREP: SSPC–SP6
B) PRIMER: CARBOLINE CARBOZINC 11
C) FINISH: CARBOLINE CARBOXANE 2000
D) FINISH COLOR TO BE FEDERAL STANDARD 595B #10049

REVISION	DATE	COMMENT	BY
D	9/16/16	ISSUED FOR CONSTRUCTION	RW
A	7/12/16	ISSUED FOR APPROVAL	RW

CES INC. CUTTING EDGE STEEL
101 MILLER DRIVE
DACONO, CO 80514
P 303–659–3180 F 303–659–3435

PROJECT	EAGLE P3
LOCATION	LOWELL BLVD.
DETAIL OF	DETAIL VIEWS
CONTRACTOR	DENVER TRANSIT CONSTRUCTORS
ARCHITECT	FHDR

HOLES	PAINT	DRAWN	CHECKED	SHEET #	JOB #
AS NOTED	SEE NOTE	RW	SG	803	14–028–M45

UNIT QTY	QUANTITY	SHIPPING MARK	SUB PC MARK	DESCRIPTION	FEET	INCHES	REMARKS	GRADE
2		804A		POST				
	4		a804	HSS2 1/2x2 1/2x11GA	1	9		A500B
	2		a800	HSS 4x4x3/16	2	10 5/8		A500B
	2		b800	FB 5/8x7	0	7		A36
	2		g800	FB 1/4x4	0	4		A36
	2		c801	HSS2 1/2x2 1/2x11GA	2	4		A500B
	2		d801	HSS2 1/2x2 1/2x11GA	1	11		
	4		f801	SQ 3/4	1	11		A36
	2		g801	EPDM 3/8x1 1/2	0	3 1/2	BUMPER	
	4			MS ¼–20x1			SEE NOTE	

NOTE: MACHINE SCREWS TO BE PAN HEAD SPANNER DRIVE SS 18–8

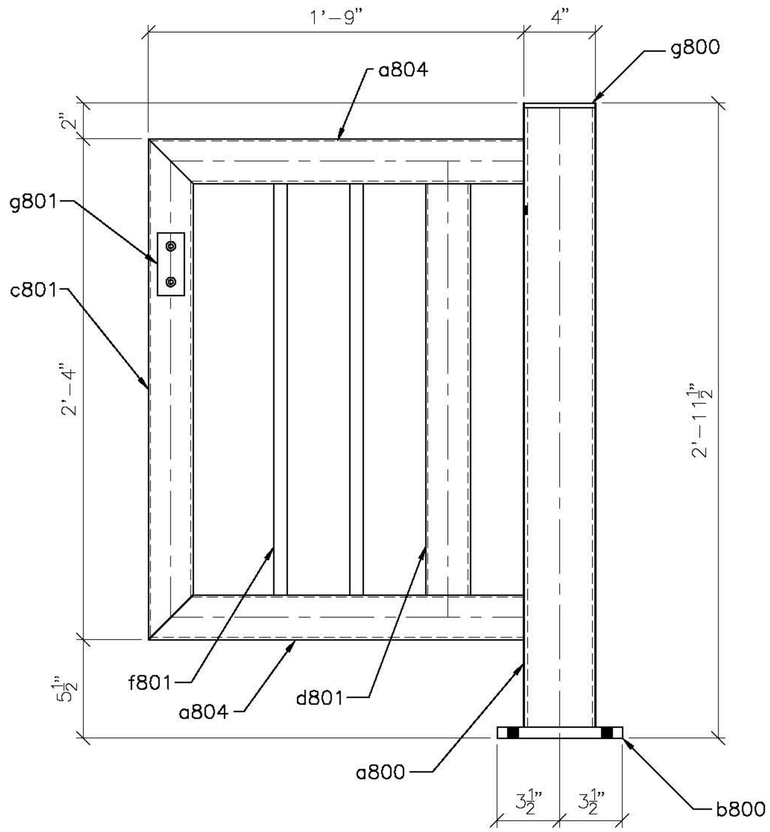

2 – 804A – POST

SCALE: 2" = 1'–0"

SHOP NOTE: PROVIDE WEEP HOLES FOR GALV.

PAINT NOTE:
1) PAINT TO BE
A) SURFACE PREP: SSPC–SP6
B) PRIMER: CARBOLINE CARBOZINC 11
C) FINISH: CARBOLINE CARBOXANE 2000
D) FINISH COLOR TO BE FEDERAL STANDARD 595B #10049

REVISION	DATE	COMMENT	BY
0	9/16/16	ISSUED FOR CONSTRUCTION	RW
A	7/12/16	ISSUED FOR APPROVAL	RW

CES INC. CUTTING EDGE STEEL
101 MILLER DRIVE
DACONO, CO 80514
P 303–659–3180 F 303–659–3435

PROJECT	EAGLE P3
LOCATION	LOWELL BLVD.
DETAIL OF	DETAIL VIEWS
CONTRACTOR	DENVER TRANSIT CONSTRUCTORS
ARCHITECT	FHDR

HOLES	PAINT	DRAWN	CHECKED	SHEET #	JOB #
AS NOTED	SEE NOTE	RW	SG	804	14–028–M45

UNIT QTY	QUANTITY	SHIPPING MARK	SUB PC MARK	DESCRIPTION	FEET	INCHES	REMARKS	GRADE
2		805A		POST				
	4		a803	HSS 3x3x11GA	0	7		A500B
	2		a800	HSS 4x4x3/16	2	10 5/8		A500B
	2		b800	FB 5/8x7	0	7		A36
	2		c800	HSS 3x3x11GA	2	4		A500B
	2		f800	L2 1/2x2 1/2x3/16	0	3 1/2		A36
	2		g800	FB 1/4x4	0	4		A36
	2		h800	POST BRACKET			D&D TECH 7526(W)	
	4			MS ¼–20x1			SEE NOTE	

NOTE: MACHINE SCREWS TO BE PAN HEAD SPANNER DRIVE SS 18–8

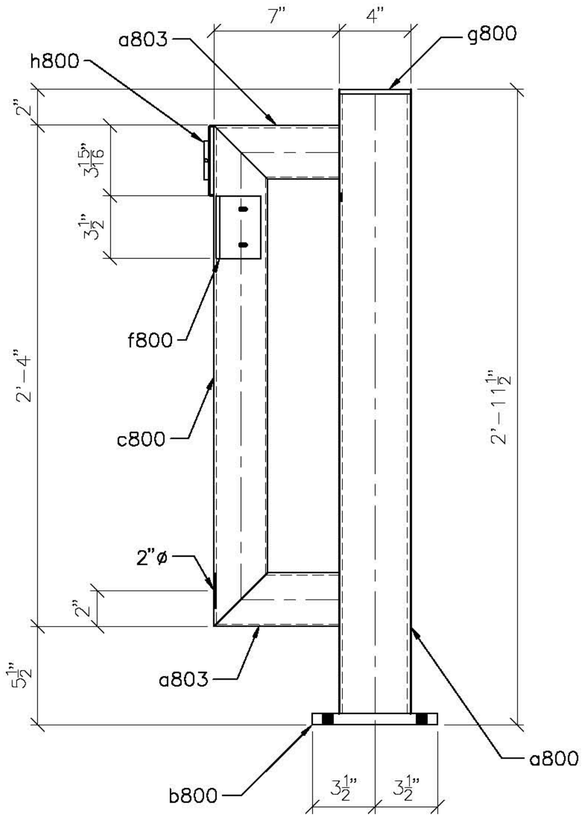

2 – 805A – POST

SCALE: 2" = 1'–0"

SHOP NOTE: PROVIDE WEEP HOLES FOR GALV.

PAINT NOTE:
1) PAINT TO BE
A) SURFACE PREP: SSPC–SP6
B) PRIMER: CARBOLINE CARBOZINC 11
C) FINISH: CARBOLINE CARBOXANE 2000
D) FINISH COLOR TO BE FEDERAL STANDARD 595B #10049

REVISION	DATE	COMMENT	BY
1	9/16/16	ISSUED FOR CONSTRUCTION	RW
A	7/12/16	ISSUED FOR APPROVAL	RW

CES INC. CUTTING EDGE STEEL
101 MILLER DRIVE
DACONO, CO 80514
P 303–659–3180 F 303–659–3435

PROJECT	EAGLE P3
LOCATION	LOWELL BLVD.
DETAIL OF	DETAIL VIEWS
CONTRACTOR	DENVER TRANSIT CONSTRUCTORS
ARCHITECT	FHDR

HOLES	PAINT	DRAWN	CHECKED	SHEET #	JOB #
AS NOTED	SEE NOTE	RW	SG	805	14–028–M45

UNIT QTY	QUANTITY	SHIPPING MARK	SUB PC MARK	DESCRIPTION	FEET	INCHES	REMARKS	GRADE
2		806A		POST				
	4		a804	HSS2 1/2x2 1/2x11GA	1	9		A500B
	2		a800	HSS 4x4x3/16	2	10 5/8		A500B
	2		b800	FB 5/8x7	0	7		A36
	2		g800	FB 1/4x4	0	4		A36
	2		c801	HSS2 1/2x2 1/2x11GA	2	4		A500B
	2		d801	HSS2 1/2x2 1/2x11GA	1	11		
	4		f801	SQ 3/4	1	11		A36
	2		g801	EPDM 3/8x1 1/2	0	3 1/2	BUMPER	
	4			MS ¼–20x1			SEE NOTE	

NOTE: MACHINE SCREWS TO BE PAN HEAD SPANNER DRIVE SS 18–8

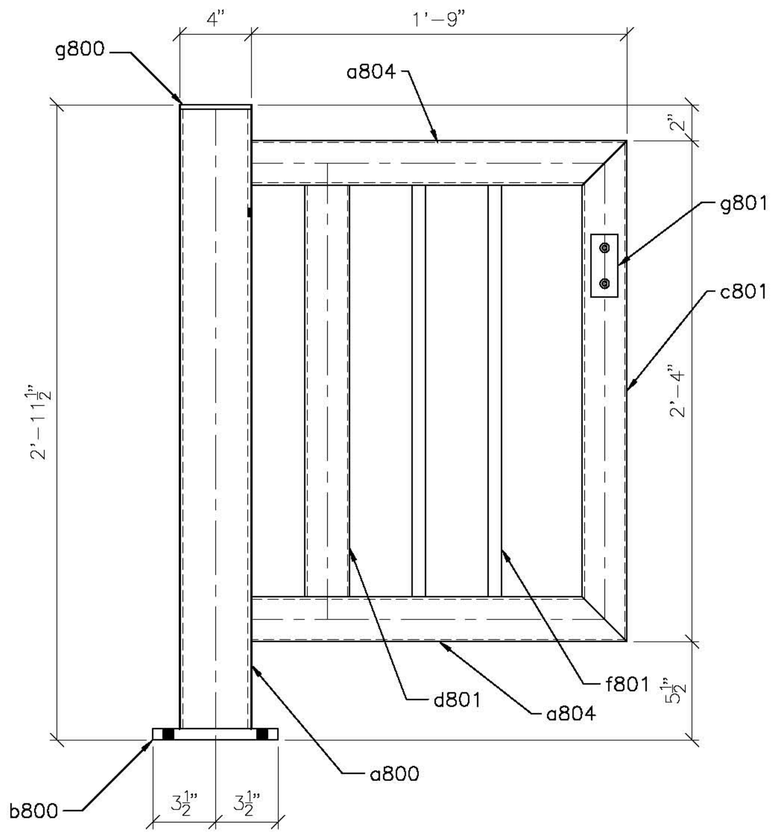

2 – 806A – POST

SCALE: 2" = 1'–0"

SHOP NOTE: PROVIDE WEEP HOLES FOR GALV.

PAINT NOTE:
1) PAINT TO BE
A) SURFACE PREP: SSPC–SP6
B) PRIMER: CARBOLINE CARBOZINC 11
C) FINISH: CARBOLINE CARBOXANE 2000
D) FINISH COLOR TO BE FEDERAL STANDARD 595B #10049

REVISION	DATE	COMMENT	BY
2	9/16/16	ISSUED FOR CONSTRUCTION	RW
1	7/12/16	ISSUED FOR APPROVAL	RW

CES INC. CUTTING EDGE STEEL
101 MILLER DRIVE
DACONO, CO 80514
P 303–659–3180 F 303–659–3435

PROJECT	EAGLE P3
LOCATION	LOWELL BLVD.
DETAIL OF	DETAIL VIEWS
CONTRACTOR	DENVER TRANSIT CONSTRUCTORS
ARCHITECT	FHDR

HOLES	PAINT	DRAWN	CHECKED	SHEET #	JOB #
AS NOTED	SEE NOTE	RW	SG	806	14–028–M45

UNIT QTY	QUANTITY	SHIPPING MARK	SUB PC MARK	DESCRIPTION	FEET	INCHES	REMARKS	GRADE
6		807A		GATE				
	12		a807	HSS2 1/2x2 1/2x11GA	3	0		A500B
	6		b807	HSS2 1/2x2 1/2x11GA	2	4		A500B
	6		c807	HSS2 1/2x2 1/2x11GA	2	4		A500B
	6		d807	FB 1/4x5 1/2	0	3 7/8	BENT	A36
	6		f807	FB 1/4x1	0	6	BENT	A36
	42		g807	SQ 3/4	1	11		A36
	6		h807	HINGE			D&D TECH 75057124	
	6		j807	HINGE			D&D TECH 75001114	
	6		g801	EPDM 3/8x1 1/2	0	3 1/2	BUMPER	
	12			MS ¼–20x1			SEE NOTE	

NOTE: MACHINE SCREWS TO BE PAN HEAD SPANNER DRIVE SS 18–8

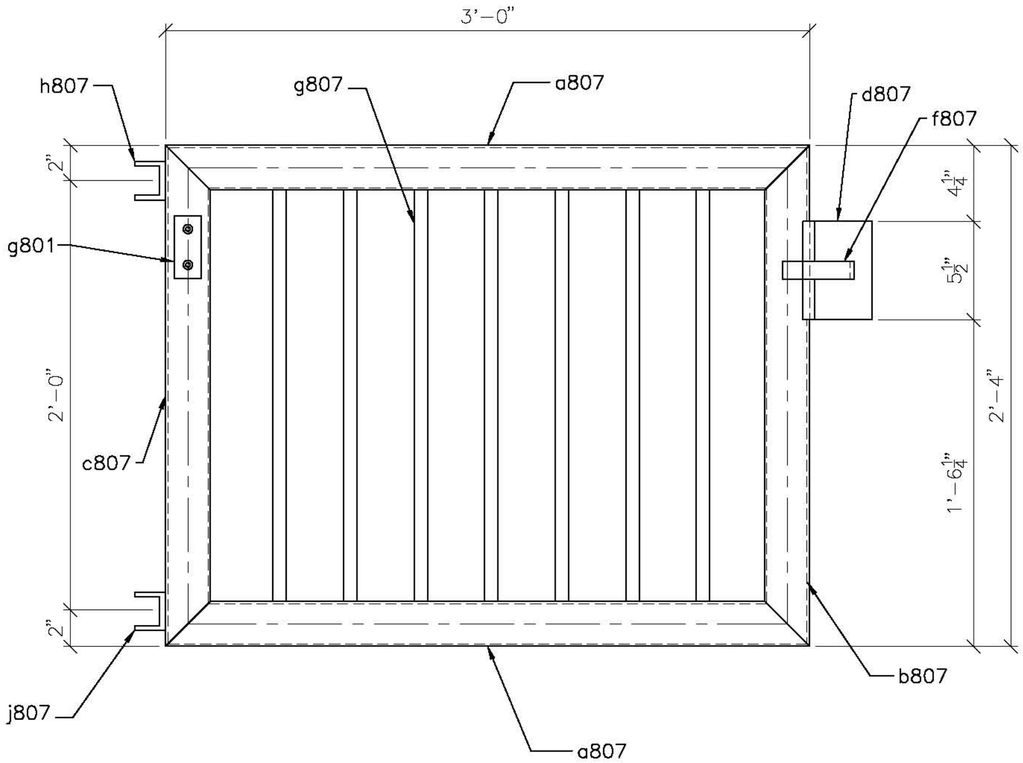

6 – 807A – GATE

SCALE: 2" = 1'–0"

SHOP NOTE: PROVIDE WEEP HOLES FOR GALV.

PAINT NOTE:
1) PAINT TO BE
A) SURFACE PREP: SSPC–SP6
B) PRIMER: CARBOLINE CARBOZINC 11
C) FINISH: CARBOLINE CARBOXANE 2000
D) FINISH COLOR TO BE FEDERAL STANDARD 595B #10049

REVISION	DATE	COMMENT	BY
0	9/16/16	ISSUED FOR CONSTRUCTION	RW
A	7/12/16	ISSUED FOR APPROVAL	RW

CES INC. CUTTING EDGE STEEL
101 MILLER DRIVE
DACONO, CO 80514
P 303–659–3180 F 303–659–3435

PROJECT	EAGLE P3
LOCATION	LOWELL BLVD.
DETAIL OF	DETAIL VIEWS
CONTRACTOR	DENVER TRANSIT CONSTRUCTORS
ARCHITECT	FHDR

HOLES	PAINT	DRAWN	CHECKED	SHEET #	JOB #
AS NOTED	SEE NOTE	RW	SG	807	14–028–M45

UNIT QTY	QUANTITY	SHIPPING MARK	SUB PC MARK	DESCRIPTION	FEET	INCHES	REMARKS	GRADE
6		808A		GATE				
	12		a807	HSS2 1/2x2 1/2x11GA	3	0		A500B
	6		b807	HSS2 1/2x2 1/2x11GA	2	4		A500B
	6		c807	HSS2 1/2x2 1/2x11GA	2	4		A500B
	6		d807	FB 1/4x5 1/2	0	3 7/8	BENT	A36
	6		f807	FB 1/4x1	0	6	BENT	A36
	42		g807	SQ 3/4	1	11		A36
	6		h807	HINGE			D&D TECH 75057124	
	6		j807	HINGE			D&D TECH 75001114	
	6		g801	EPDM 3/8x1 1/2	0	3 1/2	BUMPER	
	12			MS ¼–20x1			SEE NOTE	

NOTE: MACHINE SCREWS TO BE PAN HEAD SPANNER DRIVE SS 18–8

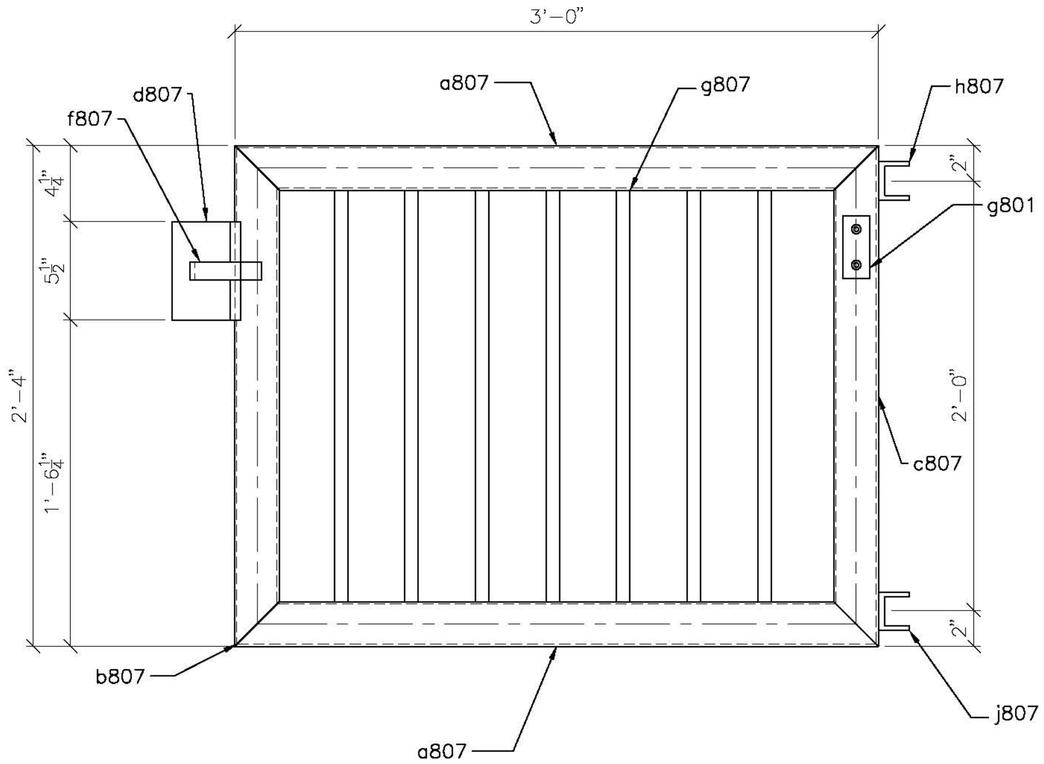

6 – 808A – GATE

SCALE: 2" = 1'–0"

SHOP NOTE: PROVIDE WEEP HOLES FOR GALV.

PAINT NOTE:
1) PAINT TO BE
A) SURFACE PREP: SSPC–SP6
B) PRIMER: CARBOLINE CARBOZINC 11
C) FINISH: CARBOLINE CARBOXANE 2000
D) FINISH COLOR TO BE FEDERAL STANDARD 595B #10049

REVISION	DATE	COMMENT	BY
1	9/16/16	ISSUED FOR CONSTRUCTION	RW
A	7/12/16	ISSUED FOR APPROVAL	RW

CES INC. CUTTING EDGE STEEL
101 MILLER DRIVE
DACONO, CO 80514
P 303–659–3180 F 303–659–3435

PROJECT	EAGLE P3
LOCATION	LOWELL BLVD.
DETAIL OF	DETAIL VIEWS
CONTRACTOR	DENVER TRANSIT CONSTRUCTORS
ARCHITECT	FHDR

HOLES	PAINT	DRAWN	CHECKED	SHEET #	JOB #
AS NOTED	SEE NOTE	RW	SG	808	14–028–M45

Exhibit B

Contractor Addendum Pricing Package

CHANGE ORDER REQUEST

Jalisco International Inc.
2018- 21 - ADCO; Lowell Blvd Improv; Clear Creek to 62nd Ave

DATE: 10/21/2019
PCO#: FO-05

To: Gordon Stevens
Adams County
4430 So, Adams County Parkway
Brighton, CO 80601
Phone: 303-453-8784
Fax:
Email: GStevens@adcogov.org

From: Amanda Dawley
Jalisco International Inc.
6663 Colorado Blvd
Commerce City, CO 80022-2219
Phone: 303.951.8745
Fax: 303.287.0511
Email: AmandaD@jalisco.org

CC: Lance Langan - Adams County - Phone: 303-453-8784 - Fax:

Below is the detail for our proposal to complete the following changes in contract work:

- Field Order: RTD Railroad Adds
- Any items added or not on this change order will need to be priced.
- Mobilization includes getting items from the warehouse and taking them to the jobsite.
- Traffic Control / Regular Flagging to be paid for under the base contract not on this Change Order.
- Due to out of sequence work we're requesting an additional 90 Calendar Days for this Work.

REVISED 04.15.2020

PCO Item	Status	Change (in Days)	Quantity	UM	Unit Price	Amount
1 : Mobilization	Submitted for Approval	90	1	ls	$15,000.00	$15,000.00
2 : Detectable Warnings (Install Only)	Submitted for Approval		50	SF	$25.00	$1,250.00
3 : Sign Panel Spec W/ Post (Install Only)	Submitted for Approval		8	EA	$400.00	$3,200.00
4 : Double Ped Gate (Special) (Foundations) (Install Gates)	Submitted for Approval		2	EA	$4,200.00	$8,400.00
5 : Signle Ped Gate (Special) (Foundations (Install Gate)	Submitted for Approval		2	EA	$3,200.00	$6,400.00
6 : Fence Chain Link (42 IN) (Special)	Submitted for Approval		84	LF	$120.00	$10,080.00
7 : Removal of Portions of Present Structure (2 Ft below Sidewalk)	Submitted for Approval		1	ls	$6,000.00	$6,000.00
						Grand Total: $ 50,330.00

CHANGE ORDER REQUEST

Jalisco International Inc.
2018- 21 - ADCO; Lowell Blvd Improv; Clear Creek to 62nd Ave

DATE: 10/21/2019
PCO#: FO-05

F/A Item:

7 : Flagging (Estimate) RTD: $29,940 / 5 Days BNSF: $998.00/ Day if they use Railpros UPPR: $998.00/ Day if they use Railpros *To be reimbursed by invoice. + Markup* *Note railroads are stating Covid-19 is impacting travel amongst states.	Estimated		41,916	F/A	$41,916.00	$41,916.00 Estimated 5 days

Jalisco will track change order items for the time it takes to complete and requires RxR Flagging. The final dollar amount will be marked up 5% by Jalisco before submitting to ADCO. The above dollar amount and days are all estimated for RTD budget purposes, Jalisco will be paid for how ever long it takes to complete this change order work. This is to include any 4-hour minimums that are charged for the work by the Flagging agencies.

Submitted By:

Amanda Dawley 04/15/2020

Amanda Dawley Date

Approved By:

Gordon Stevens Date
Adams County

Exhibit C

Contractor Right of Entry

CONTRACTOR'S RIGHT OF ENTRY AGREEMENT

This Right of Entry Agreement ("Agreement") is made September 4, 2019 (the "Effective Date") by and between the REGIONAL TRANSPORTATION DISTRICT, a political subdivision of the State of Colorado, whose address is 1660 Blake Street, Denver, Colorado 80202, ("RTD" or "Licensor") and JALISCO INTERNATIONAL, INC., a Colorado Corporation, whose address is 6663 Colorado Boulevard, Commerce City, Colorado, 80022, ("Contractor").

A. RTD and Adams County ("Grantee") are parties to a certain Permanent Easement dated July 24, 2019 (the "Easement") whereby RTD grants a non-exclusive, easement to Grantee to enter upon and have ingress to and egress from the RTD Property, pursuant to the terms of the Easement, for the purpose of constructing, maintaining, using and operating the Improvements, as that term is defined in the Easement.

B. RTD and Denver Transit Partners, LLC ("DTP") entered into a Concession and Lease Agreement dated July 9, 2010 (the "Concession Agreement") for the implementation of the RTD FasTracks Eagle Project Commuter Rail Services and Network (the "Eagle Project"), which includes the East Rail Line known as the A Line.

C. DTP and Denver Transit Operators, LLC ("DTO") entered into an Operation and Maintenance agreement dated July 9, 2010 (the "O&M Agreement") for the operation and maintenance of the Eagle Project including the A Line.

D. Grantee has employed Contractor and requested RTD to permit Contractor to perform the work related to the Improvements and RTD is agreeable thereto, subject to the following terms and conditions.

In consideration of the permission of RTD for Contractor to enter upon the RTD Property pursuant to the Easement, Contractor hereby agrees as follows:

ARTICLE 1. THE LICENSE

A. Licensor hereby grants to the Contractor permission to enter upon the RTD Property solely for purposes of Contractor performing work under the Easement. The Improvements shall be installed in the approximate orientation and location shown on Exhibit A, attached and incorporated herein. The licensed location is referred to herein as the "Premises." Contractor shall comply with all terms of the Easement applicable to its work on the RTD Property. Failure to comply with the terms of the Easement and of this Agreement may result in termination of this Agreement by RTD, effective immediately upon Contractor's receipt of notice.

B. Contractor shall obtain an approved Third Party Access Permit ("Access Permit") from DTO. Contractor must initiate a request for an Access Permit no fewer than 30 days prior to the date of the proposed access by email to rwic@rtdcrail.com. Contractor's employees and subcontractors shall be required to attend an Access Permit coordination meeting at a

time and date to be established by RTD and DTO. Contractor's employees and its subcontractors seeking access under the Access Permit shall be required to complete applicable safety training, which DTO shall provide at the Contractor's cost. This Agreement shall not be valid unless accompanied by an approved Third Party Access Permit issued by DTO.

ARTICLE 2. TERM

This Agreement shall be effective upon the Effective Date. The permission granted herein shall expire 120 days from the date of execution of this Agreement, upon completion of the work, or termination of the Easement, whichever occurs first.

ARTICLE 3. LIABILITY

A. Contractor shall be responsible for any damage, including Environmental Damages (defined in Article 5.G below), to any property, including the Premises, the RTD Property or other RTD property, DTP and DTO personal property, the City's property, Contractor's property, adjacent property, utilities, adjacent structures, and other third-party real property that is caused by Contractor's activities, and Contractor shall either promptly repair such damage or pay damages to the reasonable satisfaction of the owner of the damaged property, in either case, at no cost to Licensor, DTP or DTO. Licensor, DTP, DTO and Contractor shall notify one another of any such damage and any potential claims arising out of such damage. Nothing in this section shall be deemed to waive any of Licensor's privileges or immunities pursuant to the Colorado Governmental Immunity Act, C.R.S. §24-10-101, et seq.

B. Contractor shall indemnify, defend and hold harmless Licensor and its officers, directors, employees, agents and contractors and DTP and DTO and its officers, directors, employees, agents and contractors until expiration or earlier termination of the Concession Agreement, against and from all claims (including without limitation actions, demands, expenses, costs, attorneys' fees, court costs and judgments) arising out of or caused by the Contractor's and or its subcontractors' use of the Premises or the RTD Property hereunder, including, but not limited to, Environmental Damages (defined below). It is the intention of the parties hereto that the indemnity from Contractor to Licensor provided for in this section indemnifies RTD, its officers, directors, employees, agents and contractors and DTP and DTO and its officers, directors, employees, agents and contractors for their own negligence, whether that negligence is active or passive, or is the sole or a concurring cause of the injury, death or damage, **provided that** said indemnity shall not protect RTD, DTP or DTO from damage arising out of death or bodily injury to persons or damage to property caused solely by the willful misconduct, gross negligence and/or criminal actions of RTD, its officers, directors, employees, agents and contractors or DTP and DTO and its officers, directors, employees, agents and contractors. In the event of any claims made or suits filed, each party shall give the other prompt written notice thereof, and Licensor shall have the option to defend or reasonably settle the same as to claims or suits made against it, without effect as to Contractor's obligations hereunder. Nothing in this section shall be deemed to waive any of Licensor's privileges or immunities pursuant to the Colorado Governmental Immunity Act, C.R.S. §24-10-101, et seq.

C. The provisions of this Article 2 shall survive the termination, in whole or in part, of this Agreement.

ARTICLE 4. NO WARRANTY

A. Licensor does not grant nor purport to grant any right not specifically set forth herein. Permission for the Contractor or its contractors to traverse the property of any other property owners or interest-holders other than RTD is the sole responsibility of Contractor as is procurement of any applicable regulatory permission or consent.

B. The right to use the Premises granted hereunder is hereby contracted for and shall be granted with respect to the Premises in its "AS IS" physical condition without any warranty, express or implied. This Agreement is subject to all other prior granted or reserved rights and interests in the Premises, if any, whether of record or not.

C. Contractor specifically assumes all risk of loss, damage, or destruction to any tools, equipment, or materials, if any, that Contractor or its contractor stores on the Premises or RTD Property, whether the loss, damage or destruction results from accident, act of God, the elements, severe weather, theft or vandalism.

ARTICLE 5. INSURANCE

A. Contractor shall procure and maintain, and shall require that its contractors and subcontractors procure and maintain, the following types of insurance, at a minimum, with an insurer or insurers and in a form satisfactory to RTD:

1. Commercial General Liability Insurance with contractual liability endorsement, which shall provide coverage for limits of not less than $5,000,000 each occurrence and an aggregate limit of at least $10,000,000, and shall also include, but be not limited to, coverage for bodily injury, property damage, and products and competed operations. Following the completion of construction, this insurance will be maintained (renewed annually) for a time period no less than through the period of the applicable Colorado statute(s) of limitation and, if applicable, the Colorado statute of repose. Such policy will name RTD, DTP and DTO as an additional insured.

2. Umbrella/Excess Liability Insurance. An umbrella/excess liability policy may be procured to meet the requirements of the Commercial General Liability Insurance limits. Such excess insurance shall be at least as broad as the Contractor's Commercial General Liability, Automobile Liability, and Workers' Compensation and Employers' Liability Insurance. Such policy will name RTD, DTP and DTO as an additional insured.

3. Automobile Liability Insurance with a combined single limit of at least $1,000,000 per occurrence, and include coverage for, but not be limited to, bodily injury liability and property damage liability, for any vehicles owned, used or hired. Such policy will name RTD, DTP and DTO as an additional insured.

4. Workers' Compensation and Employers' Liability Insurance covering all employees of Grantee and its contractors, wherever they may be in the United States of America so long as they are engaged in the work covered by this Agreement. The policy or policies shall cover the entire liability of the Grantee and its contractors as determined by the Workers' Compensation laws of the state or states under which such liability

arises, and shall contain, so far as it is lawful to obtain the same, a waiver of insurer's right of subrogation against RTD, DTP and DTO for payments made to or on behalf of employees of the Grantee's and contractors. Employers' Liability Insurance shall provide coverage for limits of not less than $500,000.

5. Railroad Protective Liability Insurance. This insurance shall name RTD, DTP and DTO as the Insured with coverage of at least $5,000,000 per occurrence and $10,000,000 in the aggregate. The coverage obtained under this policy shall only be effective during the initial installation and/or construction of the Improvements. If further maintenance of the Improvements is needed at a later date, an additional Railroad Protective Liability Insurance policy shall be required. The policy shall be issued on a standard ISO form CG 00 35 12 03 and include the following: (i) endorsed to include the Pollution Exclusion Amendment, (ii) endorsed to include the Limited Seepage and Pollution Endorsement, (iii) endorsed to include Evacuation Expense Coverage Endorsement. In addition, (x) no other endorsements restricting coverage may be added, (y) the original policy must be provided to Licensor prior to performing any work or services under this Easement, and (z) the definition of "Physical Damage to Property" shall be endorsed to read: "means direct and accidental loss of or damage to all property owned by any named insured and all property in any named insured's care, custody and control arising out of the acts or omissions of the contractor named on the Declarations."

6. Contractors Pollution Liability Insurance including contractual liability and providing third-party coverage for bodily injury, property damage, defense, and cleanup as a result of pollution conditions (sudden/accidental and gradual) arising from contracting operations performed. The amount of such coverage shall be no less than $5,000,000 per occurrence and aggregate.

7. Prior to entry upon, above or adjacent to the RTD Property, Contractor agrees to furnish RTD, DTP and DTO with a certificate of insurance for itself and for each of its subcontractor(s)' policy(ies). Contractor shall provide 30 days' advance notice of cancellation of its and its contractor(s)' policy(ies) by Registered or Certified mail. Certificates of insurance shall be provided to the RTD Manager of Real Property as provided in Article 9.Q and DTO Track Usage Coordinator at track.usage@rtdcrail.com.

8. Each insurance certificate shall have the following endorsements attached thereto:

   a) An endorsement naming RTD an additional insured and naming DTP and DTO an additional insured for so long as DTP provides the Commuter Rail Services as such term is defined in the Concession Agreement;

   b) An endorsement evidencing coverage for a liability assumed under an insured contract for liability assumed by the Grantee, its contractor and contractor's subcontractors under this Agreement;

   c) An endorsement providing that all policy or endorsement limitation(s) relating specifically to operations on or near railroad property are eliminated, including an endorsement "Contractual Liability - Railroads" (ISO CG 24 17) to amend the definition of "insured contract" to delete the "railroad exclusion," provided,

however, that such endorsement is not required if Railroad Protective Liability Insurance is provided as set forth in A.5 of this article;

d) A Broad Form Property Damage endorsement if the policy does not provide for the equivalent coverage; and

e) Waiver of subrogation in favor of and acceptable to RTD, DTP and DTO.

9. In the event of reduction or exhaustion of the applicable aggregate limit or limits of liability under the primary policy or policies referred to in the certificate of insurance solely by reason of losses paid hereunder on account of occurrences during the policy period, the excess policy, if any, referred to in the certificate shall (1) in the event of reduction, apply as excess of the reduced limit of liability thereunder; and (2) in the event of exhaustion, continue in force as though it were primary insurance. For claims covered by the insurance specified herein, said insurance coverage shall be primary and non-contributory insurance with respect to the insured, additional insured parties, and their respective members, directors, officers, employees and agents and shall specify that coverage continues notwithstanding the fact that Grantee, its contractor and its subcontractors have left the RTD Property.

B. The insurance shall apply separately to each insured and additional insured party against whom a claim is made or suit is brought, except with respect to the limits of the insurer's liability.

C. Liability of Contractor under this section shall not be limited to coverage provided under said insurance policies.

D. Only those contractors and subcontractors of Contractor whose operations are covered by insurance will be authorized to work upon or about the RTD Property.

ARTICLE 6. ENVIRONMENTAL OBLIGATIONS

A. For purposes of this "Environmental Obligations" article, the terms "Activity" and "Activities" shall include any action or omission of Contractor, and/or the subsidiaries, affiliates, agents, contractors, employees, contractors, invitees, successors or assigns of Contractor.

B. No Hazardous Material on Property. Except in strict compliance with all Environmental Requirements (defined in Article 5.F below), Contractor shall not cause, permit or suffer any Hazardous Material (defined in Article 5.E below) to be brought upon, treated, kept, stored, disposed of, discharged, released, produced, manufactured, generated, refined or used upon, about or beneath the RTD Property or any portion thereof by Contractor, its subsidiaries, affiliates, agents, employees, contractors, invitees, successors or assigns, or any other person.

C. No Violations of Environmental Requirements. Contractor, in performing the Activities shall not cause, permit or suffer the existence or the commission by Contractor, its agents, employees, contractors, invitees, or successors or assigns of a material violation of any Environmental Requirements upon, about or beneath the RTD Property or any portion thereof.

D. No Environmental or Other Liens. Contractor, in performing the Activities, shall not create or suffer to exist with respect to the RTD Property, or permit any of its agents (including,

but not limited to, contractors) to create or suffer to exist any lien, security interest or other charge or encumbrance of any kind, including without limitation, any lien imposed pursuant to section 107(f) of the Superfund Amendments and Reauthorization Act of 1986 (42 U.S.C. Section 9607(1)) or any similar state statute.

E. For purposes of this Agreement, "Hazardous Material(s)" means any and all substances, chemicals, wastes, or other materials now or from time to time hereafter:

1. defined as hazardous substances or hazardous wastes pursuant to the Comprehensive Environmental Response, Compensation and Liability Act (42 U.S.C. § 9601 et seq.) (CERCLA), the Resource Conservation and Recovery Act (42 U.S.C. § 6901 et seq.) (RCRA), and/or the Colorado Hazardous Waste Act Sections 25-15-101 et seq., Colorado Revised Statutes, and the Colorado Hazardous Waste Regulations, 6 C.C.R. 1007-3;

2. characterized as hazardous or toxic materials, substances, chemicals, pollutants, contaminants or wastes that are regulated, subject to permitting or warning requirements, or for which removal, remediation or disposal is required or regulated, under any and all laws for the protection of the environment, human health and safety, including without limitation CERCLA, RCRA, the Hazardous Materials Transportation Act (49 U.S.C. § 1801, et seq.), the Federal Water Pollution Control Act (33 U.S.C. § 1251, et seq.), the Clean Air Act (42 U.S.C. § 7401 et seq.) and/or the Colorado Hazardous Waste Act (§ 25 15-311 et seq., Colorado Revised Statutes); the Colorado Solid Waste Act (§ 30-20-100.5 et seq., C.R.S); the Colorado Water Quality Control Act (§ 25-8-101 et seq., Colorado Revised Statutes), Colorado Air Pollution Prevention and Control Act (§ 25-7-101 et seq., Colorado Revised Statutes), Title 8 Article 20.5, Colorado Revised Statutes, and any federal, state or local regulations and associated guidance promulgated thereunder; or

3. otherwise posing a present or potential risk to human health, welfare or the environment, including, without limitation, asbestos, flammable, explosive, corrosive or radioactive materials, gasoline, oil, motor oil, waste oil, petroleum (including without limitation, crude oil or any component thereof), and petroleum-based products, paints and solvents; lead, cyanide, DDT and other pesticides, and polychlorinated biphenyls.

F. For purposes of this Agreement, "Environmental Requirements" means all applicable present and future statutes, regulations, rules, ordinances, codes, licenses, permits, orders, approvals, plans, authorizations, concessions, franchises, and similar items, of all governmental agencies, departments, commissions, boards, bureaus, or instrumentalities of the United States, states and political subdivisions thereof and all applicable judicial, administrative, and regulatory decrees, judgments, and orders relating to the protection of human health or the environment, including, without limitation:

1. all requirements, including but not limited to those pertaining to reporting, licensing, permitting, investigation, and remediation of emissions, discharges, releases, or threatened releases of Hazardous Materials, whether solid, liquid, or gaseous in nature, into the air, surface water, groundwater, or land, or relating to the manufacture, processing, distribution, use, treatment, storage, disposal, transport, or handling of Hazardous Materials, whether solid, liquid, or gaseous in nature; and

2. all requirements pertaining to the protection of the health and safety of employees or the public.

G. For purposes of this Agreement, "Environmental Damages" means all claims, judgments, damages, losses, penalties, fines, liabilities (including strict liability), encumbrances, liens, costs, and expenses of investigation and defense of any claim, whether or not such claim is ultimately defeated, and of any good faith settlement of judgment related to Activities, of whatever kind or nature, contingent or otherwise, matured or unmatured, foreseeable or unforeseeable, including without limitation reasonable attorneys' fees and disbursements and consultants' fees, any of which are incurred at any time as a result of the existence of Hazardous Material upon, about, or beneath the RTD Property or migrating or threatening to migrate to or from the RTD Property, or the existence of a violation of Environmental Requirements pertaining to the RTD Property and including without limitation:

1. damages for personal injury, or injury to property or natural resources occurring upon or off of the RTD Property, foreseeable or unforeseeable, including, without limitation, lost profits, consequential damages, the cost of demolition and rebuilding of any improvements on real property, interest and penalties including but not limited to claims brought by or on behalf of employees of Contractor;

2. fees incurred for the services of attorneys, consultants, contractors, experts, laboratories and all other costs incurred in connection with the investigation or remediation of such Hazardous Materials or violation of Environmental Requirements including, but not limited to, the preparation of any feasibility studies or reports or the performance of any cleanup, remediation, removal, response, abatement, containment, closure, restoration or monitoring work required by any federal, state or local governmental agency or political subdivision, or reasonably necessary to make full economic use of the RTD Property or any other property otherwise expended in connection with such conditions, and including without limitation any attorneys' fees, costs and expenses incurred in enforcing this Agreement or collecting any sums due hereunder; and

3. liability to any third person or governmental agency to indemnify such person or agency for cost expended in connection with the items referenced in Article 6.G.2 herein.

ARTICLE 7. SUB-CONTRACTORS

All of the limitations and obligations imposed upon the Contractor pursuant to this Agreement shall be to apply with equal force and effect to any of Contractor's sub-contractors (together "sub-contractors") performing any work on or about the RTD Property. The Contractor shall be primarily liable and responsible to Licensor for all acts or omissions of any sub-contractor employed upon or about the RTD Property pursuant hereto. Nothing herein contained shall be construed to preclude the Licensor from proceeding or taking any legal action against the Contractor and any sub-contractor individually or collectively. Only those sub-contractors whose operations are covered by the insurance provisions hereof will be authorized to work upon the RTD Property. In the event that any sub-contractor does not have its own insurance coverage as set forth in Article 5, hereof, Contractor shall cause such sub-contractor to be a named insured under Contractor's policies set forth in Article 5.

No sub-contractor shall be permitted entry upon Licensor's property until proof of sub-Contractor's coverage required by Article 5 and this Article is submitted to Licensor, and approved by Licensor's Risk Manager.

ARTICLE 8. DIGGING OR BORING

Prior to performing any digging or boring activities on the RTD Property, the Contractor shall determine if a telecommunications system or other utility is buried anywhere on or about the RTD Property in the location where Contractor will perform such digging or boring activities. If there is such a telecommunications system or other utility, Contractor will determine the owner of such telecommunications system or other utility, and take such actions in cooperation with the owner(s) as are necessary so as not to damage such system or utility.

ARTICLE 9. SAMPLES/REMOVAL

As between Contractor and Licensor, Contractor shall be solely responsible for the lawful removal, manifesting, transport, testing and disposal of any samples or other materials, including Hazardous Materials, removed from the Premises or generated as a result of activities performed pursuant to this Agreement, and shall duly and properly perform or cause to be performed any such activities that it undertakes or is required to undertake pursuant to federal, state, and local laws and applicable industry standards. Contractor states and agrees that as between Contractor and Licensor, Contractor is the sole Generator (as the term "Generator" is used in applicable statutes and regulations concerning the removal, transport and/or disposal of Hazardous Materials, substances, waste or other contaminants of any materials, including Hazardous Materials) of any materials, including Hazardous Materials, removed from the Premises by Contractor, its subcontractors, agents or employees or generated as a result of sampling and/or testing activities undertaken by Contractor, its subcontractors, agents or employees.

ARTICLE 10. GENERAL

A. Assignment. This Agreement, and any part or interest in this Agreement, may not be assigned by Contractor without the prior written consent of Licensor. No Licensor-approved assignment shall release Contractor from any liability hereunder. Any assignment in violation of this Agreement shall be null and void.

B. Agreement Binding. This Agreement and all of the covenants, terms and conditions herein contained shall be binding upon and inure to the benefit of the parties hereto, and their respective permitted successors and assigns.

C. Execution in Counterparts. This Agreement (and each amendment, modification and waiver in respect of this Agreement) may be executed and delivered in counterparts (including by facsimile or email transmission), each of which will be deemed an original, but all of which when taken together shall constitute a single contract and thereafter shall be binding upon and inure to the benefit of the Parties hereto and their respective permitted successors and assigns. Delivery of an executed counterpart of a signature page to this Agreement (including by facsimile or email) shall be effective as delivery of a manually executed counterpart of this Agreement.

D. Laws to Apply; Jurisdiction and Venue. The laws of the State of Colorado and applicable federal, state and local laws, rules, regulations and guidelines govern this Agreement. Jurisdiction and venue for all disputes shall be in the county in which the Premises is located and Contractor expressly submits itself to the jurisdiction thereof.

E. Amendment. This Agreement may not be amended except in writing by mutual agreement of Contractor and Licensor, nor may rights be waived except by an instrument in writing signed by the party charged with such waiver.

F. No Agency. It is expressly understood and agreed that Licensor and Contractor do not intend to be and shall not in any respect be deemed agents of each other, but shall be deemed to each be an independent contractor.

G. Headings. The headings of the sections of this Agreement are inserted for reference purposes only and are not restrictive as to content.

H. Liens. Contractor shall not permit any lien, claim or other charge to be placed on the RTD Property, and Contractor shall promptly cause any such lien, claim or charge to be removed. If any mechanic's lien, claim or other charge is filed against the RTD Property, Contractor shall discharge the same of record by a release or bond within 30 days after the filing of any notice of such lien, claim or other charge. This Article 10.H shall survive termination, in whole or in part, of this Agreement.

I. Waiver; Severability. The failure of any party hereto to exercise any right hereunder, or to insist upon strict compliance by the other party, shall not constitute a waiver of either party's right to demand strict compliance with the terms and conditions of this Agreement. If any provision of this Agreement is held to be unenforceable for any reason, its unenforceability shall not affect the remainder of this Agreement, which shall remain in full force and effect and enforceable in accordance with its terms.

J. Legal Authority. The Contractor warrants that it possesses the legal authority to enter into this Agreement and that it has taken all actions required by its procedures, by-laws, and/or applicable law to exercise that authority, and to lawfully authorize its undersigned signatory to execute this Agreement and to bind the Contractor to its terms. The person(s) executing this Agreement on behalf of the Contractor warrant(s) that such person(s) have full authorization to execute this Agreement.

K. No Dedication; Third Parties. Nothing herein shall be deemed to be a gift or dedication of any portion of the Premises to the general public or for any public use or purpose whatsoever. Except as herein specifically provided, no rights, privileges or immunities of either party shall inure to the benefit of any third party, nor shall any third party be deemed to be a beneficiary of any of the provisions contained in this Agreement.

L. Breach. Any failure of Contractor to fulfill any of Contractor's obligations hereunder shall constitute a breach of this Agreement and subject Contractor to immediate termination of the Agreement, as well as damages and costs, including attorneys' fees.

M. Applicable Laws; Violation. Contractor shall use the Premises in a safe and careful manner and shall comply with all applicable ordinances and regulations of the jurisdiction in which the Premises is located; federal, state, and local laws; and all other rules of governmental authorities as may be in force and effect during the term of this Agreement.

If at any time the use of the Premises by Contractor violates said applicable ordinances or laws, Contractor shall cease and desist from continuing such use and upon demand by RTD.

N. Additional Grantees. Contractor understands and agrees that during the term of this Agreement, the RTD Property may be used by the public or otherwise, and Contractor shall conduct its work so as not to unreasonably interfere with such other uses.

O. Equipment. Contractor shall not use RTD, DTP or DTO equipment, tools or furnishings located in or about the Premises without prior written approval by RTD, DTP or DTO.

P. Notices. Unless otherwise prescribed in this Agreement, any notices required to be given shall be provided in writing and mailed by U.S. mail, first class postage prepaid, and addressed as follows:

If to Licensor: Regional Transportation District
Attn: Manager, Real Property
1560 Broadway, Suite 650
Denver, Colorado 80202
(303) 299-2440

With a copy to: Regional Transportation District
Attn: Senior Manager, Commuter Rail
1560 Broadway, Suite 650
Denver, Colorado 80202
Phone: (303) 299-2617
In emergency: (303) 299-2911
Operations Control Center (720-460-5959
Security Command Center (303) 299-2929

and

Denver Transit Operators, LLC
rwic@rtdcrail.com

If to Contractor: [Insert Contractor contact information]

Jalisco International, Inc.
Attn: Anthony Ledzema, Executive Vice President
6663 Colorado Boulevard
Commerce City, CO 80022
303.287.8905

The address or telephone number to which any notice, demand, or other writing may be provided may be changed by written notice to the above addressees.

Q. Equipment. Contractor shall not use RTD, DTP or DTO equipment, tools or furnishings located in or about the Premises without prior written approval by RTD, DTP or DTO.

Signature Page to Follow

IN WITNESS WHEREOF, the parties have duly executed this Agreement as of the Effective Date.

LICENSOR
REGIONAL TRANSPORTATION DISTRICT

By: _____
Henry J. Stopplecamp, P.E.
Assistant General Manager
Capital Programs

Date: 9-4-19

APPROVED AS TO LEGAL FORM
FOR THE
REGIONAL TRANSPORTATION DISTRICT

Aimee J Beckwith
Aimee J. Beckwith
Associate General Counsel
Date: 7/25/19

CONTRACTOR
JALISCO INTERNATIONAL, INC.

By: _____

Name: Antonio D. Ledezma

Title: Executive Vice President

Date: 08/30/2019

EXHIBIT A
to
Contractor's Right of Entry Agreement

ADAMS COUNTY

PLAN AND PROFILE OF PROPOSED

LOWELL BOULEVARD IMPROVEMENTS

CLEAR CREEK TO W. 62ND AVENUE

ADAMS COUNTY PROJECT NO. IMP2013-00009
ADAMS COUNTY, COLORADO

TABULATION OF LENGTH & DESIGN DATA

STATION	FEET ROADWAY	FEET MAJOR STRUCTURE
STA. 100+27.12, BEGIN PROJECT	2142.94	
STA. 121+70.06, RT BEGIN RETAINING WALL	329.94	329.94
STA. 125+00, RT END RETAINING WALL	1043.27	
STA. 135+43.27, END PROJECT		
TOTAL	3516.15	329.94
DESIGN DATA		
MAXIMUM DEGREE OF CURVE	N/A	
MAXIMUM GRADE	1.58%	
MINIMUM S.S.D. HORIZONTAL	400'	
MINIMUM S.S.D. VERTICAL	500'	
MAXIMUM DESIGN SPEED	50 MPH	
POSTED SPEED	40 MPH	
2035 DESIGN ESAL	730,000	
K MIN (CREST)	84	
K MIN (SAG)	96	
GRADE: MIN / MAX	0.30% / 1.58%	
DESIGN VEHICLE	WB-67	

(FOR INFORMATION ONLY)

CONTACTS

ADAMS COUNTY — ADAMS COUNTY
4430 S. ADAMS COUNTY PARKWAY
BRIGHTON, CO 80601
JENNIFER SHI, PE 720-523-6968

CIVIL ENGINEER: HUITT-ZOLLARS
4582 S. ULSTER STREET #240
DENVER, CO 80237
GERALD PRUSIK, PE 303-740-7325

NOTE:
PUBLIC IMPROVEMENTS SHALL CONFORM TO ADAMS COUNTY STANDARDS AND SPECIFICATIONS AND LATEST EDITION OF COLORADO DEPARTMENT OF TRANSPORTATION STANDARD SPECIFICATIONS

ADAMS COUNTY
APPROVED FOR BID:

DIRECTOR OF TRANSPORTATION — DATE

ENGINEERING MANAGER — DATE

PROJECT MANAGER — DATE

811 Know what's below. Call before you dig.

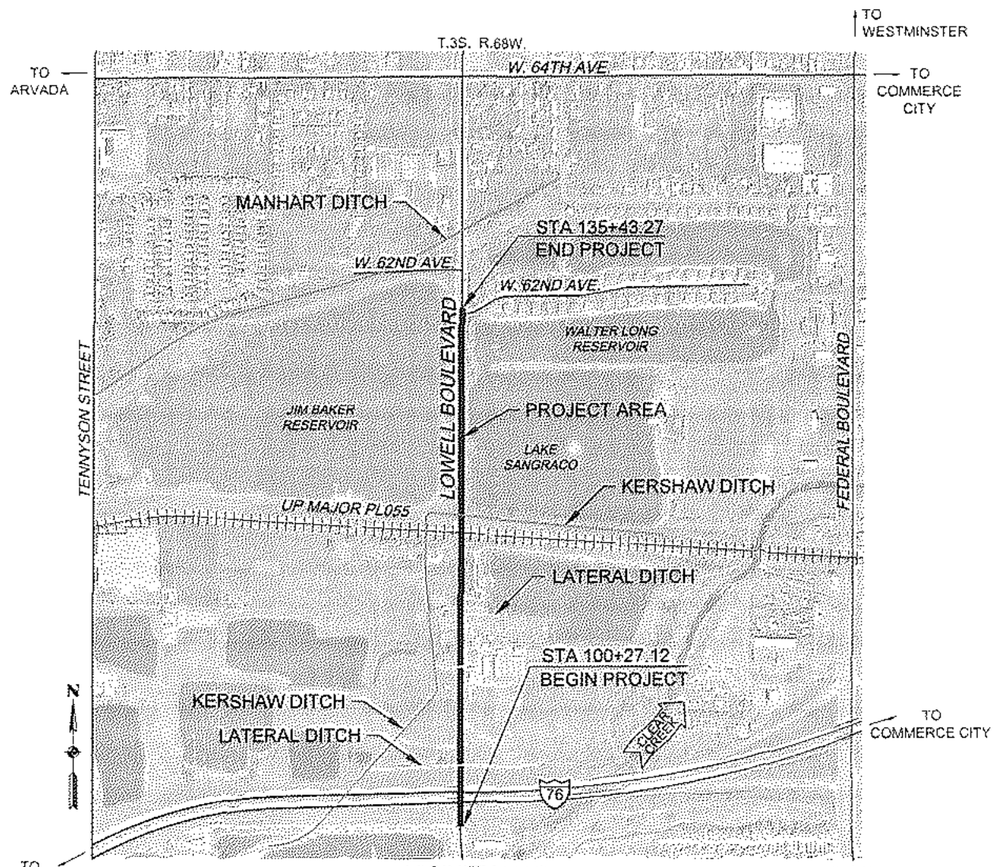

VICINITY MAP
SCALE 1" = 500'

INDEX OF SHEETS

1	CV-1	TITLE SHEET
2	G-2	CDOT STANDARD PLAN LIST
3	G-3	GENERAL NOTES
4 TO 5	PC-1 TO PC-2	PROJECT CONTROL DIAGRAM
6	SC-1	SURVEY TABULATION
7	HC-1	HORIZONTAL CONTROL DIAGRAM
8	SB-1	SOIL BORING PLAN
9	SB-2	SOIL BORING LOG
10	SB-3	SOIL BORING LEGEND
11 TO 12	SQ-1 TO SQ-2	SUMMARY OF APPROXIMATE QUANTITIES
13 TO 16	TX-1 TO TX-4	TYPICAL SECTIONS
17	MP-0.1	REMOVAL OF ASPHALT (PLANING) TYPICAL SECTIONS
18 TO 23	MP-1 TO MP-6	PAVEMENT PLANING PLAN
24	CT-0.1	TABULATION OF CONSTRUCTION TRAFFIC CONTROL DEVICES
25 TO 27	CT-1 TO CT-3	SUGGESTED CONSTRUCTION PHASING TYPICAL SECTIONS
28 TO 29	CT-4 TO CT-5	SUGGESTED CONSTRUCTION TRAFFIC CONTROL PLAN
30 TO 31	EC-0.1 TO EC-0.2	TABULATION OF STORMWATER MANAGEMENT ITEMS
32 TO 34	EC-0.3 TO EC-0.5	STORMWATER MANAGEMENT PLAN GENERAL NOTES
35 TO 38	EC-1 TO EC-4	SITE PLAN- INITIAL STORMWATER MANAGEMENT PLAN
39 TO 42	EC-5 TO EC-8	SITE PLAN- INTERIM STORMWATER MANAGEMENT PLAN
43 TO 46	EC-9 TO EC-12	SITE PLAN- FINAL STORMWATER MANAGEMENT PLAN
47	DM-0.1	TABULATION OF REMOVALS AND MISCELLANEOUS RESETS
48 TO 53	DM-1 TO DM-6	DEMOLITION AND MISCELLANEOUS RESET PLAN
54	RD-0.1	TABULATION OF CURB, GUTTER, SIDEWALK, AND GUARDRAIL
55	RD-0.2	TABULATION OF FENCING
56	RD-0.3	TABULATION OF SURFACING QUANTITIES
57	RD-0.4	SUMMARY OF EARTHWORK QUANTITIES
58 TO 66	RD-1 TO RD-9	ROADWAY PLAN AND PROFILE
67 TO 75	DR-1 TO DR-9	DRIVEWAY DETAILS
76	SS-0.1	SIGNING DETAILS
77 TO 78	SS-0.2 TO SS-0.3	TABULATION OF SIGNS AND PAVEMENT MARKINGS
79 TO 81	SS-1 TO SS-3	SIGNING AND STRIPING PLANS
82 TO 83	SD-0.1 TO SD-0.2	TABULATION OF STORM SEWER SYSTEM
84 TO 90	SD-1 TO SD-8	STORM SEWER PLAN AND PROFILE
91	SD-8	MANHOLE SPECIAL DETAILS
92	UT-0.1	TABULATION OF UTILITY ITEMS
93	UT-0.2	TABULATION OF POTHOLES
94 TO 98	UT-1 TO UT-5	UTILITY PLANS AND WATER DETAILS
99	RW-1	GENERAL NOTES AND TABULATION OF RETAINING WALL QUANTITIES
100	RW-2	BRIDGE RAIL TYPE 10H (SPECIAL)
101	RW-3	RETAINING WALL PLAN AND PROFILE
102	RW-4	RETAINING WALL TYPICAL SECTIONS AND DETAILS
103 TO 126	XS-1 TO XS-24	ROADWAY CROSS SECTIONS
APPENDIX A.		REVISED CDOT STANDARD PLANS

COLORADO LICENSED GERALD PRUSIK 25083 PROFESSIONAL ENGINEER

Computer File Information			
Designed By:	GP	Drawn By:	JMP
Creation Date:	12-17-2011	Initials:	DKIM
Last Modification Date:	11-14-2017	Initials:	JMP
Drawing File Name:	.../SHEET/0320PH01-G001-CV.DWG		
AutoCAD Version:	C3D 2014	Units:	English

Index of Revisions: (R-) (R-) (R-) (R-) (R-)

PREPARED FOR: ADAMS COUNTY, 4430 S. ADAMS COUNTY PARKWAY, BRIGHTON, COLORADO 80601 — CONTACT: JENNIFER SHI, PE

PREPARED BY: HUITT-ZOLLARS, 4582 S. Ulster St. Ste 240, Denver, CO 80237, Phone (303) 740-7325, Fax (303) 224-9897 — CONTACT: GERALD PRUSIK, PE

LOWELL BOULEVARD IMPROVEMENTS
CLEAR CREEK TO W. 62ND AVENUE

TITLE SHEET

Project No. / Code: ADAMS COUNTY: IMP2013-00009; HUITT-ZOLLARS: 16-0320-01

Sheet Name: CV-1

Sheet Number: 1

PRINT STAMP: 2017.11.13 03:55:13 PM

TYPICAL SECTION NOTES

1. MATCH EXISTING PAVEMENT CROSS SLOPE AND GRADES AT BEGIN AND END PROJECT. PROVIDE A 25' TRANSITION BETWEEN EXISTING AND PROPOSED ROADWAY SECTION.
2. BREAK POINTS ON SLOPES AND IN BOTTOMS OF DITCHES SHALL BE ROUNDED DURING CONSTRUCTION. SEE CDOT STANDARDS M-203-2 FOR DETAILS OF CUT SLOPE TREATMENT, FLARING AND WIDENING.
3. ASPHALT SAW CUTTING SHALL NOT BE MEASURED AND PAID FOR SEPARATELY BUT SHALL BE INCLUDED IN THE WORK.
4. ASPHALT PAVEMENT MEASURING LESS THAN 8' IN WIDTH SHALL BE PAID FOR AS HMA PATCH. HMA PAVEMENT MEASURING 8' OR GREATER SHALL BE PAID FOR AS HMA PAVEMENT.
5. CATCH SLOPES EXCEEDING 3:1, AS INDICATED PER PLAN, SHALL HAVE SOIL RETENTION BLANKETS INSTALLED. APPROXIMATE LOCATIONS OF SOIL RETENTION BLANKET ARE LOCATED ON SHEETS EC-9 THROUGH EC-12.

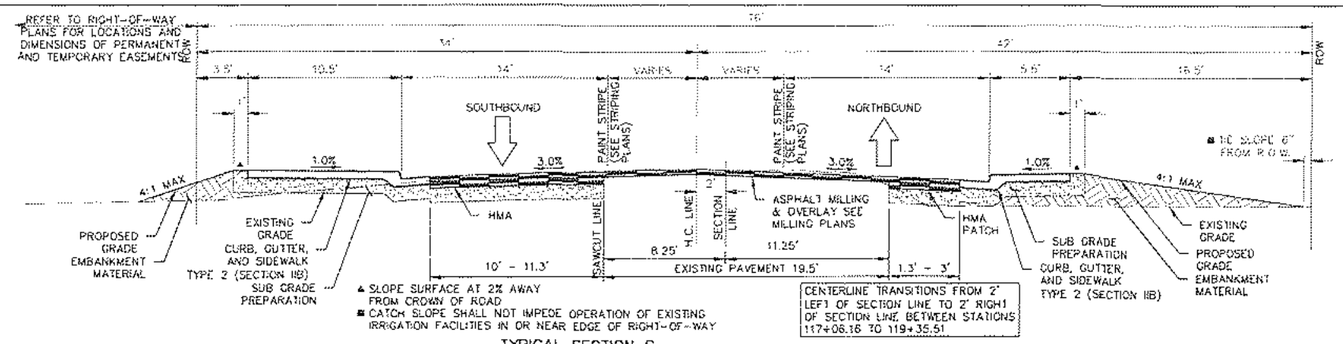

TYPICAL SECTION G
STA: 117+48.99 TO 119+62.36

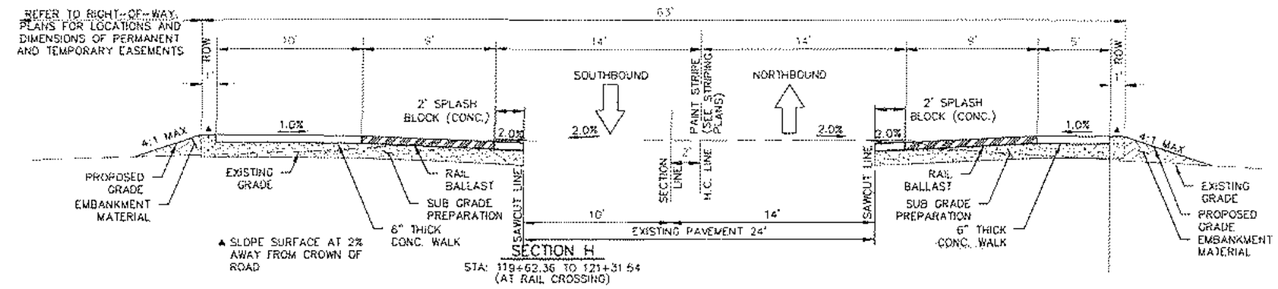

SECTION H
STA: 119+62.36 TO 121+31.54
(AT RAIL CROSSING)

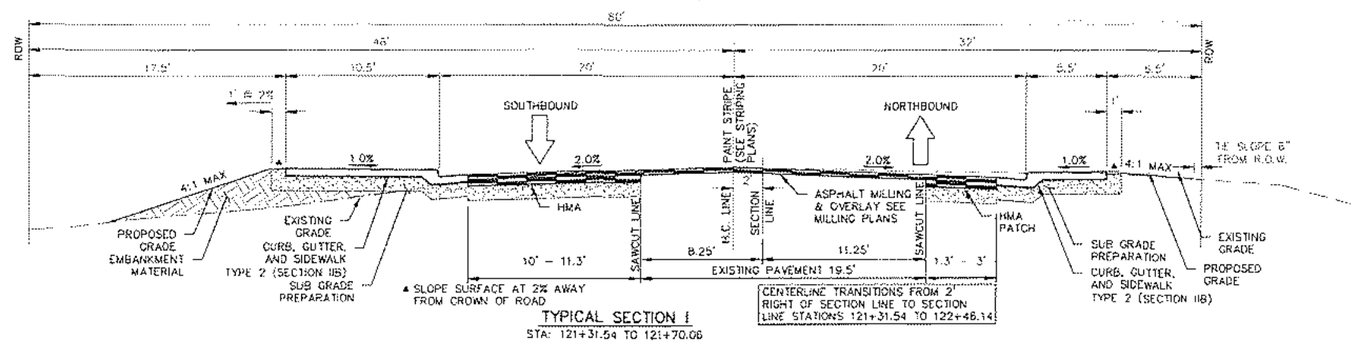

TYPICAL SECTION I
STA: 121+31.54 TO 121+70.06

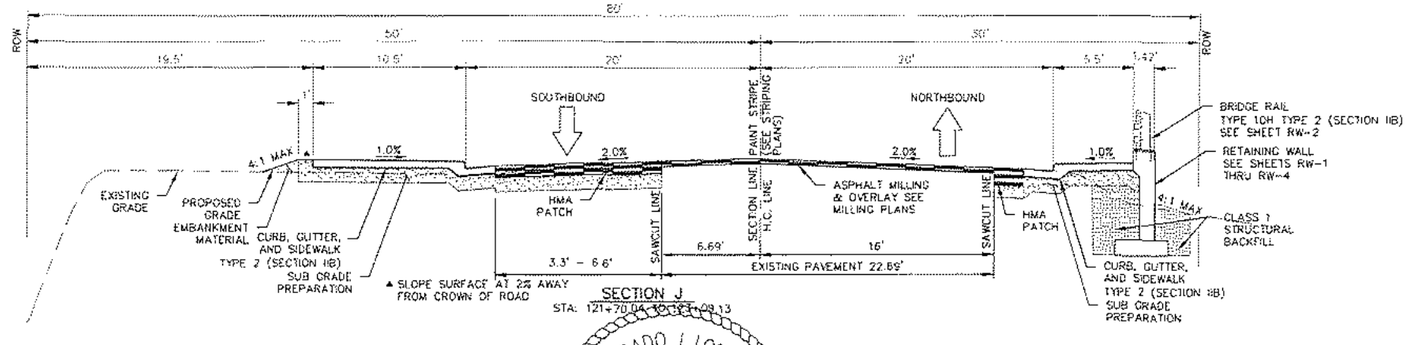

SECTION J
STA: 121+70.04 TO 123+09.13

COLORADO LICENSED
GERALD PRUSIK
25083
PROFESSIONAL ENGINEER

Computer File Information			
Designed By:	GP	Drawn By:	JMP
Creation Date:	12-17-2011	Initials:	DKIM
Last Modification Date:	11-14-2017	Initials:	JMP
Drawing File Name:	../SHEET/0320PH01-C001-TXS.DWG		
AutoCAD Version:	C3D 2014	Units:	English

Index of Revisions

R-		
R-		
R-		
R-		
R-		

PREPARED FOR
ADAMS COUNTY
4430 S. ADAMS COUNTY PARKWAY
BRIGHTON, COLORADO 80601
CONTACT: JENNIFER SIE, PE

PREPARED BY
HUITT-ZOLLARS
4582 S. Ulster St. Ste 240 Denver, CO 80237
Phone (303) 740-7325 Fax (303) 224-9997
CONTACT: GERALD PRUSIK, PE

LOWELL BOULEVARD IMPROVEMENTS
CLEAR CREEK TO W. 62ND AVENUE

ROADWAY
TYPICAL SECTIONS

Project No. / Code	
ADAMS COUNTY: IMP2013-00009 HUITT-ZOLLARS: 16-0320-01	
Sheet Name	TX-3
Sheet Number	15

PRINTSTAMP: 2017.11.10 07:51:42 AM

811
Know what's below.
Call before you dig.

STA 118+00
LOWELL HCL

STA 124+00
LOWELL HCL

MATCH LINE

MATCH LINE

Parcel 3
TOSO Holdings, LLC
PN 0182507400003

Parcel 2
City Of Westminster
PN 0182507400002

Parcel 17
Eddie & Carol Sann
PN 0182508300005

Parcel 19
Lowy Limited Liability Company
PN 0182508211002

5880 Lowell Blvd.

5865 Lowell Blvd.

TEMPORARY CONSTRUCTION EASEMENT

PROPOSED R.O.W.

PROPOSED R.O.W.

BNSF

UPRR

RTD GOLD RAIL LINE

ROW

PL

REFER TO TYPICAL SECTIONS FOR SAWCUT DIMENSIONS

LOWELL BLVD

118+50 119+00 119+50 120+00 120+50 121+00 121+50 122+00 122+50 123+00 123+50 124+

PI: 121+31.55

PI: 122+46.14

END PLANING
STA: 119+62.42

BEGIN PLANING
STA: 121+31.54

LEGEND:

- FULL DEPTH PAVEMENT REMOVAL
- PAVEMENT PLANING
- CONCRETE REMOVAL
- APPROXIMATE DEPTH OF MILLING INTO EXISTING MAT

NOTES:

1. THE CONTRACTOR SHALL SUBMIT A PLANING PLAN AND QUALITY PLAN (QCP) FOR APPROVAL BY THE COUNTY PRIOR TO BEGINNING PLANING.

2. THE CONTRACTOR SHALL MILL SURFACE BY A STRING LINE TO CONTROL THE FINAL GRADE.

3. SPOT ELEVATIONS SHOWN ON EXISTING PAVEMENT NORTH OF RAILROAD INDICATE APPROXIMATE MILLING DEPTH BASED ON A NOMINAL 3" MILL DEPTH FROM DESIGN PROFILE ELEVATIONS. CONTRACTOR SHALL FOLLOW PROPOSED GRADE LINE ON ROADWAY PLANS TO MILL ROADWAY TO ACCEPT FINAL PAVEMENT LIFT. AREAS WHERE MILL DEPTH DOES NOT ENCOUNTER EXISTING ASPHALT MAT, AREA SHALL BE SCARIFIED.

20 0 20 40

Computer File Information			
Designed By:	GP	Drawn By:	JMP
Creation Date:	12-17-2011	Initials:	DKIM
Last Modification Date:	11-14-2017	Initials:	JMP
Drawing File Name:	../SHEET/0320PH01-C01X-MP.DWG		
AutoCAD Version:	C3D 2014	Units:	English

Index of Revisions

R-		
R-		
R-		
R-		
R-		

PREPARED FOR
ADAMS COUNTY
4430 S. ADAMS COUNTY PARKWAY
BRIGHTON, COLORADO 80601
CONTACT: JENNIFER SHI, PE

PREPARED BY
HUITT-ZOLLARS
4582 S. Ulster St. Ste 240 Denver, CO 80237
Phone (303) 740-7325 Fax (303) 224-9997
CONTACT: GERALD PRUSIK, PE

COLORADO LICENSED
GERALD PRUSIK
25083
PROFESSIONAL ENGINEER

LOWELL BOULEVARD IMPROVEMENTS
CLEAR CREEK TO W. 62ND AVENUE

PAVEMENT PLANING PLAN

Project No. / Code	ADAMS COUNTY: IMP2013-00099 HUITT-ZOLLARS: 16-0320-01
Sheet Name	MP-4
Sheet Number	21

PRINTSTAMP: 2017.11.16 07:59:42 AM

PHASE I CONSTRUCTION

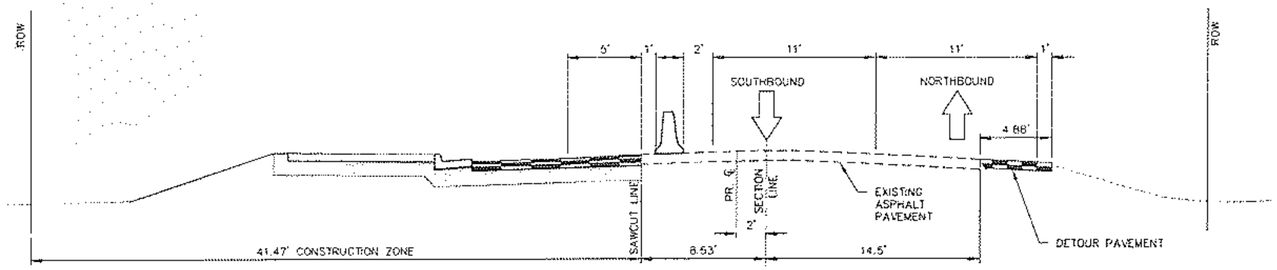

PHASE I CONSTRUCTION SOUTH OF RAILS
STA:100+27.12 TO STA:117+06.16
TRANSITION STA:117+06.16 TO STA: 119+35.36

NOTE: CONTRACTORS SHALL PROVIDE TRAFFIC CONTROL FOR THE PLACEMENT OF DETOUR PAVEMENT

1. LOWELL BLVD SHALL REMAIN OPEN TO LOCAL TRAFFIC
2. CONSTRUCT DETOUR PAVEMENT
3. PLACE CONSTRUCTION SIGNING, PLACE DETOUR PAVEMENT, REMOVE PAVEMENT MARKING AS NEEDED, PLACE DETOUR PAVEMENT MARKINGS.
4. INSTALL PRECAST TYPE 7 BARRIERS
5. SHIFT TRAFFIC EAST TO EXISTING AND DETOUR PAVEMENT

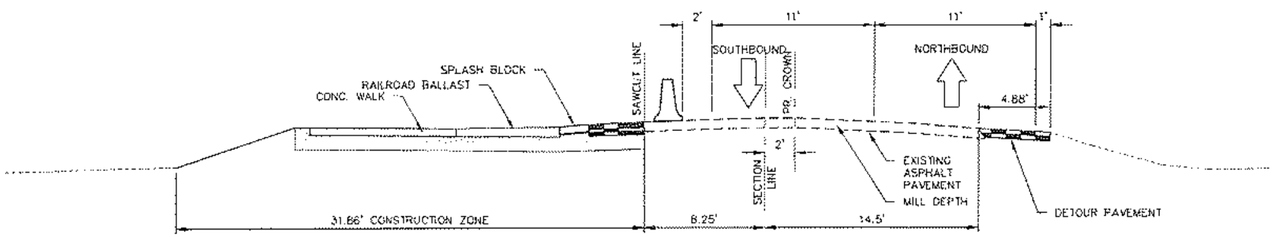

PHASE I CONSTRUCTION AT RAILS
STA:119+35.36 TO STA:121+31.54
TRANSITION STA:121+31.54 TO STA:122+46.14

NOTE: CONTRACTORS SHALL PROVIDE TRAFFIC CONTROL FOR THE PLACEMENT OF DETOUR PAVEMENT

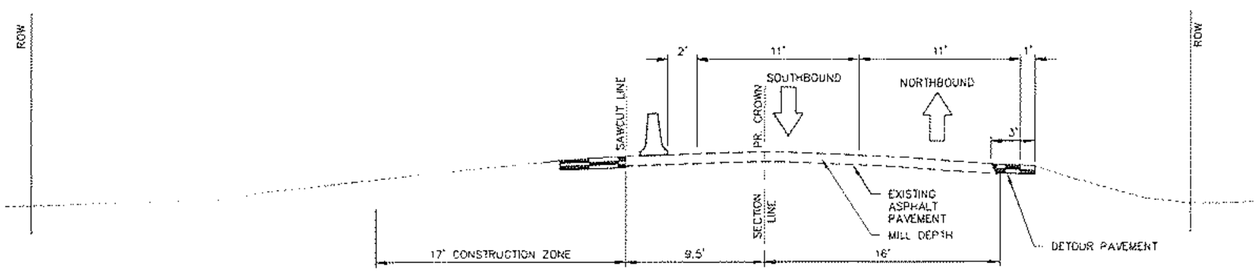

PHASE I CONSTRUCTION NORTH OF RAILS
STA:122+46.14 TO STA:135+43.27

NOTE: CONTRACTORS SHALL PROVIDE TRAFFIC CONTROL FOR THE PLACEMENT OF DETOUR PAVEMENT

PRINTSTAMP: 2017.11.10 08:06:33 AM

Computer File Information			
Designed By:	GP	Drawn By:	JMP
Creation Date:	12-17-2011	Initials:	DKIM
Last Modification Date:	11-14-2017	Initials:	JMP
Drawing File Name:	.../SHEET/0320PH01-C21X-CTC.DWG		
AutoCAD Version:	C3D 2014	Units:	English

Index of Revisions		
R-		
R-		
R-		
R-		
R-		

PREPARED FOR
ADAMS COUNTY
4430 S. ADAMS COUNTY PARKWAY
BRIGHTON, COLORADO 80601
CONTACT: JENNIFER SHI, PE

PREPARED BY
HUITT-ZOLLARS
4582 S. Ulster St. Ste 240 Denver, CO 80237
Phone (303) 740-7325 Fax (303) 224-9997
CONTACT: GERALD PRUSIK, PE

COLORADO LICENSED
GERALD PRUSIK
25083
PROFESSIONAL ENGINEER

LOWELL BOULEVARD IMPROVEMENTS
CLEAR CREEK TO W. 62ND AVENUE

SUGGESTED CONSTRUCTION PHASING TYPICAL SECTIONS

Project No. / Code	
ADAMS COUNTY: IMP2013-00009 HUITT-ZOLLARS: 16-0320-01	
Sheet Name	CT-1
Sheet Number	25

PHASE II CONSTRUCTION

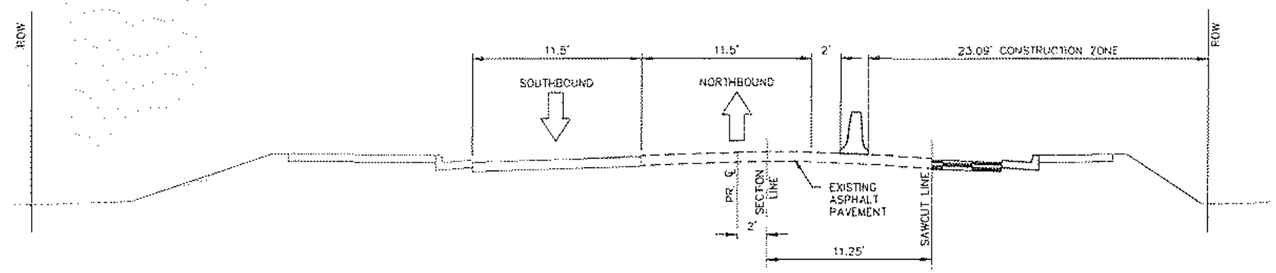

PHASE II CONSTRUCTION
STA:100+27.12 TO STA:117+06.16
TRANSITION STA:117+06.16 TO STA: 119+35.36

1. SHIFT TRAFFIC TO THE WEST ONTO THE NEW AND EXISTING PAVEMENT CONSTRUCTED IN PHASE I
2. REMOVE DETOUR PAVEMENT AND PREPARE SUB-GRADE FOR PERMANENT PAVEMENT
3. CONSTRUCT EAST SIDE OF LOWELL BLVD, INCLUDING RETAINING WALL. (EXCEPT ASPHALT TOP LIFT)
4. INSTALL SIGNAGE AND PAVEMENT MARKINGS FOR PHASE II (TEMPORARILY COVER/MASK SIGNS AS NEEDED)

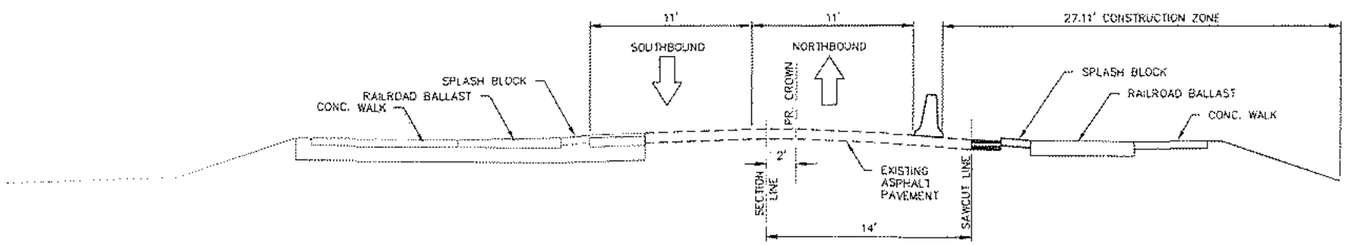

PHASE II CONSTRUCTION AT RAILS
STA:119+35.36 TO STA:121+31.54
TRANSITION STA:121+31.54 TO STA:122+46.14

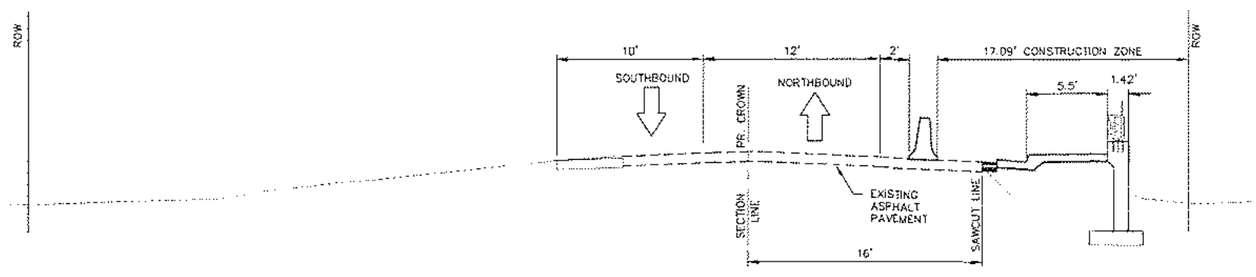

PHASE II CONSTRUCTION NORTH OF RAILS
STA:122+46.14 TO STA:135+43.27

Computer File Information			
Designed By:	GP	Drawn By:	JMP
Creation Date:	12-17-2011	Initials:	DKIM
Last Modification Date:	11-14-2017	Initials:	JMP
Drawing File Name:	.../SHEET/0320PR01-C21X-CTC.DWG		
AutoCAD Version:	C3D 2014	Units:	English

Index of Revisions		
R-		
R-		
R-		
R-		
R-		

PREPARED FOR:
ADAMS COUNTY
4430 S. ADAMS COUNTY PARKWAY
BRIGHTON, COLORADO 80601
CONTACT: JENNIFER SHI, PE

PREPARED BY:
HUITT-ZOLLARS
4582 S. Ulster St. Ste 240 Denver, CO 80237
Phone (303) 740-7325 Fax (303) 224-9997
CONTACT: GERALD PRUSIK, PE

COLORADO LICENSED
GERALD PRUSIK
25083
PROFESSIONAL ENGINEER

LOWELL BOULEVARD IMPROVEMENTS
CLEAR CREEK TO W. 62ND AVENUE

SUGGESTED CONSTRUCTION PHASING TYPICAL SECTIONS

Project No. / Code	
ADAMS COUNTY: IMP2013-00009 HUITT-ZOLLARS: 16-0320-01	
Sheet Name	CT-2
Sheet Number	26

PRINTSTAMP: 2017.11.10 08:06:51 AM

FINAL PHASE ASPHALT TOP LIFT

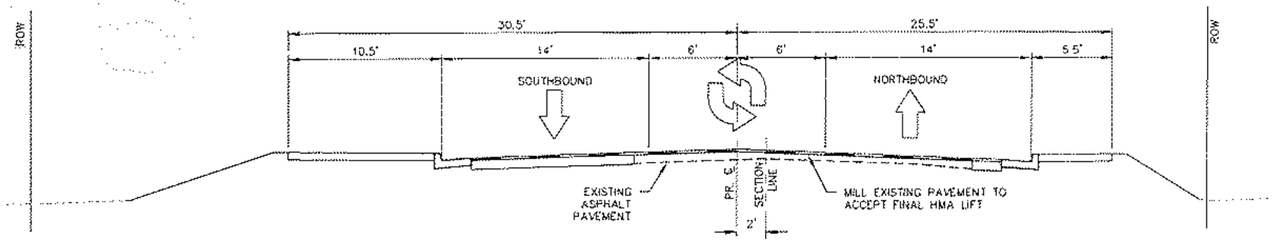

FINAL PHASE ASPHALT TOP LIFT SOUTH OF RAILS
STA:100+27.12 TO STA:117+06.16

1. PLANE EXISTING ASPHALT MAT
2. INSTALL ASPHALT TOP LIFT
3. INSTALL PERMANENT PAVEMENT MARKINGS AND UNCOVER/UNMASK SIGNS AND PAVEMENT MARKINGS
4. REMOVE REMAINING CONSTRUCTION ACTIVITY SIGNAGE

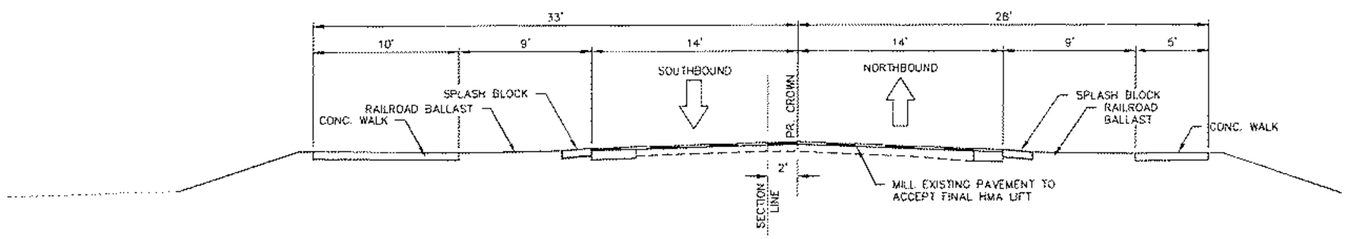

FINAL PHASE ASPHALT TOP LIFT AT RAILS
STA:119+35.36 TO STA:121+31.54
TRANSITION STA:121+31.54 TO STA:122+46.14

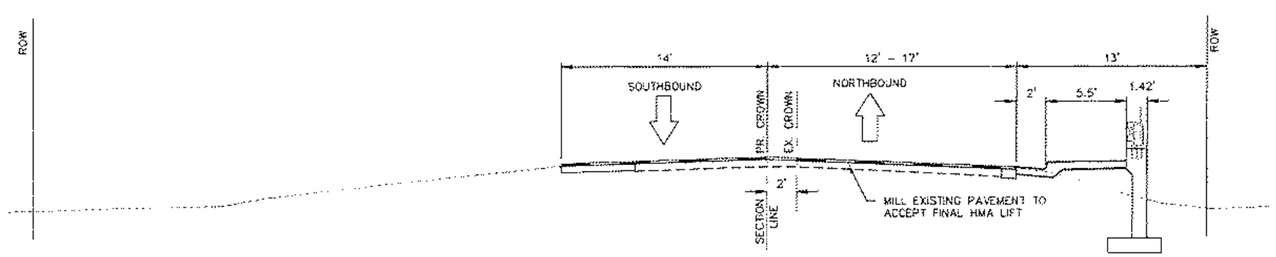

FINAL PHASE ASPHALT TOP LIFT NORTH OF RAILS
STA:122+46.14 TO STA:135+43.27

Computer File Information			
Designed By:	GP	Drawn By:	JMP
Creation Date:	12-17-2011	Initials:	DKIM
Last Modification Date:	11-14-2017	Initials:	JMP
Drawing File Name:	.../SHEET/0320PH01-C21X-CTC.DWG		
AutoCAD Version:	C3D 2014	Units:	English

Index of Revisions		
R-		
R-		
R-		
R-		
R-		

PREPARED FOR
ADAMS COUNTY
4430 S. ADAMS COUNTY PARKWAY
BRIGHTON, COLORADO 80601
CONTACT: JENNIFER SHI, PE

PREPARED BY
HUITT-ZOLLARS
4582 S. Ulster St. Ste 240 Denver, CO 80237
Phone (303) 740-7325 Fax (303) 224-9997
CONTACT: GERALD PRUSIK, PE

COLORADO LICENSED
GERALD PRUSIK
25083
PROFESSIONAL ENGINEER

LOWELL BOULEVARD IMPROVEMENTS
CLEAR CREEK TO W. 62ND AVENUE

SUGGESTED CONSTRUCTION PHASING TYPICAL SECTIONS

Project No. / Code	
ADAMS COUNTY: IMP2013-00009 HUITT-ZOLLARS: 16-0320-01	
Sheet Name	CT-3
Sheet Number	27

PRINTSTAMP: 2017.11.10 08:07:27 AM

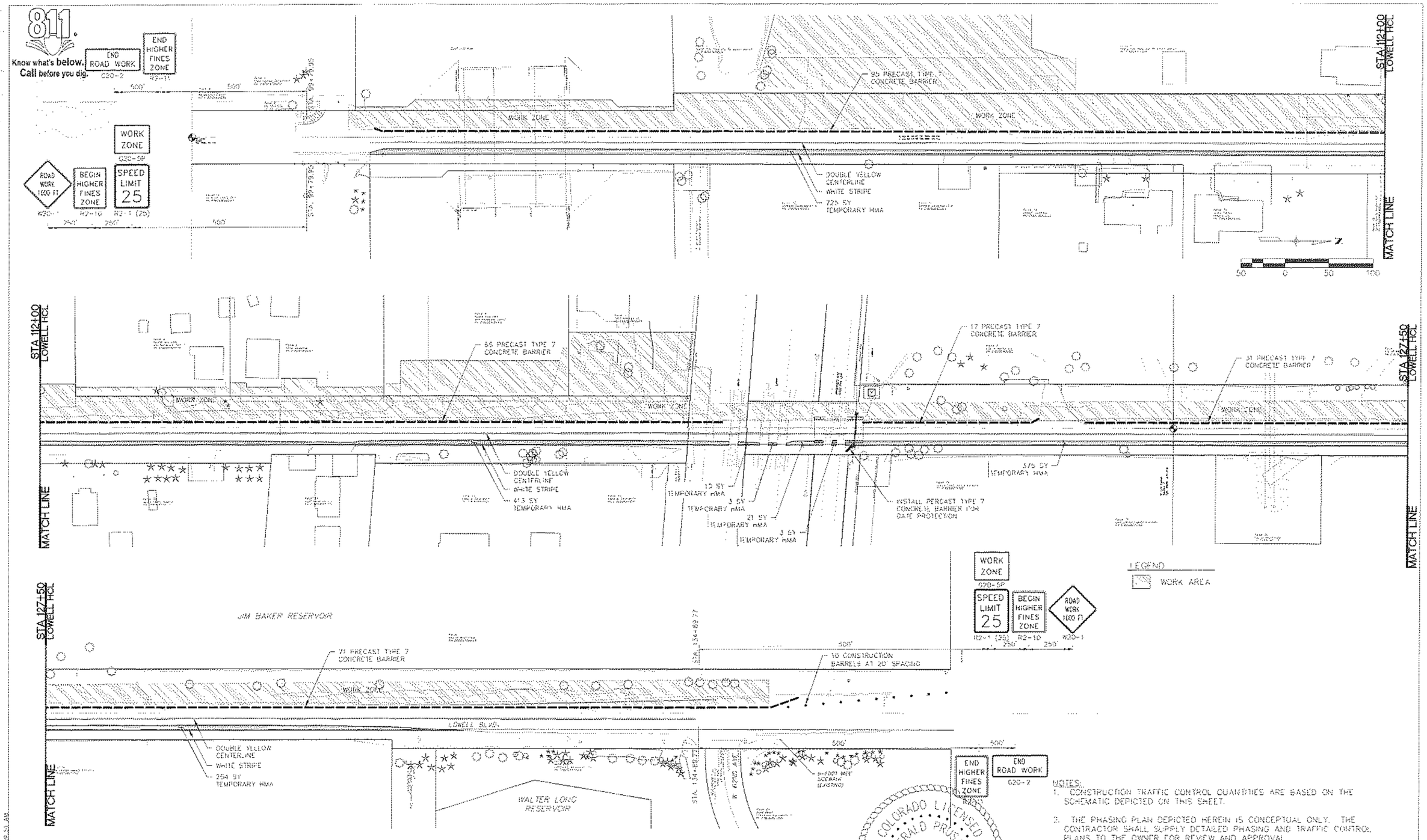

NOTES:

1. CONSTRUCTION TRAFFIC CONTROL QUANTITIES ARE BASED ON THE SCHEMATIC DEPICTED ON THIS SHEET.
2. THE PHASING PLAN DEPICTED HEREIN IS CONCEPTUAL ONLY. THE CONTRACTOR SHALL SUPPLY DETAILED PHASING AND TRAFFIC CONTROL PLANS TO THE OWNER FOR REVIEW AND APPROVAL.

Computer File Information			
Designed By:	GP	Drawn By:	JMP
Creation Date:	12-17-2011	Initials:	DKIM
Last Modification Date:	11-14-2017	Initials:	JMP
Drawing File Name:	.../SHEET/0320PH01-C21X-CTC-1.DWG		
AutoCAD Version:	C3D 2014	Units:	English

Index of Revisions

R-	
R-	
R-	
R-	
R-	

PREPARED FOR

ADAMS COUNTY
4430 S. ADAMS COUNTY PARKWAY
BRIGHTON, COLORADO 80601
CONTACT: JENNIFER SHI, PE

PREPARED BY

HUITT-ZOLLARS
4582 S. Ulster St. Ste 240 Denver, CO 80237
Phone (303) 740-7325 Fax (303) 224-9997
CONTACT: GERALD PRUSIK, PE

COLORADO LICENSED
GERALD PRUSIK
25083
PROFESSIONAL ENGINEER

LOWELL BOULEVARD IMPROVEMENTS
CLEAR CREEK TO W. 62ND AVENUE

PHASE I SUGGESTED
CONSTRUCTION TRAFFIC CONTROL

Project No. / Code	ADAMS COUNTY: IMP2013-00009 HUITT-ZOLLARS: 16-0320-01
Sheet Name	CT-4
Sheet Number	28

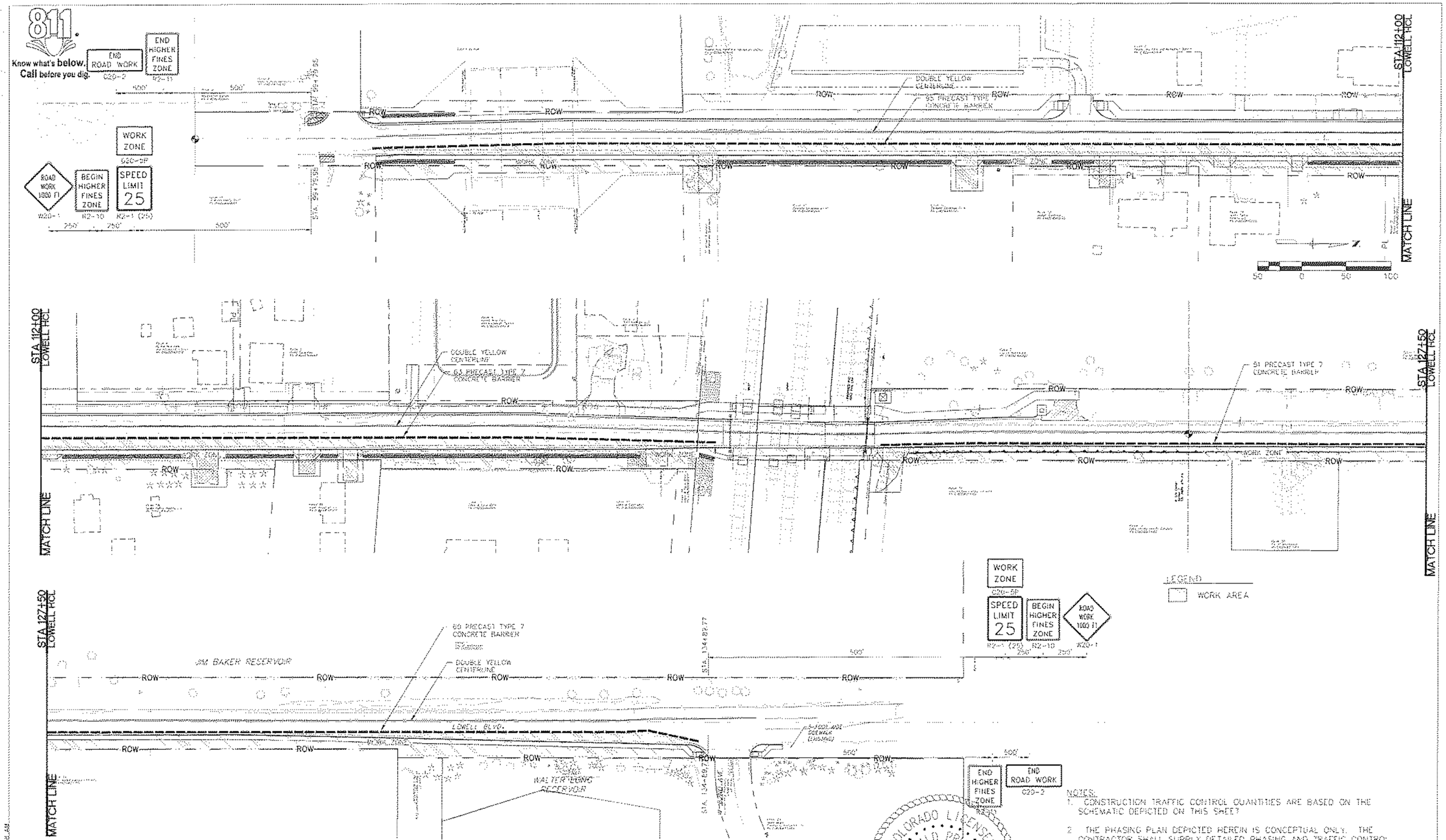

NOTES:

1. CONSTRUCTION TRAFFIC CONTROL QUANTITIES ARE BASED ON THE SCHEMATIC DEPICTED ON THIS SHEET.
2. THE PHASING PLAN DEPICTED HEREIN IS CONCEPTUAL ONLY. THE CONTRACTOR SHALL SUPPLY DETAILED PHASING AND TRAFFIC CONTROL PLANS TO THE OWNER FOR REVIEW AND APPROVAL.

COLORADO LICENSED GERALD PRUSIK 25083 PROFESSIONAL ENGINEER

Computer File Information				Index of Revisions
Designed By:	GP	Drawn By:	JMP	R-
Creation Date:	12-17-2011	Initials:	DKIM	R-
Last Modification Date:	11-14-2017	Initials:	JMP	R-
Drawing File Name:	.../SHEET/0320PH01-C21X-CTC-2.DWG			R-
AutoCAD Version:	C3D 2014	Units:	English	R-

PREPARED FOR
ADAMS COUNTY
4430 S. ADAMS COUNTY PARKWAY
BRIGHTON, COLORADO 80601
CONTACT: JENNIFER SHI, PE

PREPARED BY
HUITT-ZOLLARS
4582 S. Ulster St. Ste 240 Denver, CO 80237
Phone (303) 740-7325 Fax (303) 224-9997
CONTACT: GERALD PRUSIK, PE

LOWELL BOULEVARD IMPROVEMENTS
CLEAR CREEK TO W. 62ND AVENUE

PHASE II SUGGESTED
CONSTRUCTION TRAFFIC CONTROL

Project No. / Code
ADAMS COUNTY: IMP2013-00009
HUITT-ZOLLARS: 16-0320-01

Sheet Name CT-5

Sheet Number 29

811. Know what's below. Call before you dig.

CONTRACTOR SHALL SUBMIT A PLAN INDICATING THE LOCATION OF PROJECT STAGING AREA, PORTABLE CONCRETE WASHOUT AREAS (2), AND VEHICLE TRACKING MAT FOR APPROVAL BY ADAMS COUNTY PRIOR TO ISSUANCE OF PERMIT

Parcel 5 Hyland Hills Park and Recreation District PN 0182507401016

Parcel 6 Gloria Delorese PN 0182507400005

STA 112+00 LOWELL HCL — STA 116+00 LOWELL HCL

EXISTING ROW — PROPOSED ROW — TOE OF SLOPE — PROTECT EXISTING STORM DRAIN — DRAINAGE EASEMENT — KERSHNA OVERFLOW DITCH — 40' TEMPORARY CONSTRUCTION EASEMENT — 10' TEMPORARY CONSTRUCTION EASEMENT — 10' PROPOSED R.O.W.

SF 278 LF — SF 70 LF — SF 92 LF — WP 155 LF — SF 205 LF — WP 136 LF — EL 20 LF

LOWELL BLVD.

PROTECT EXISTING IRRIGATION PIPE — EXISTING ROW — SF 145 LF — WP 157 LF — SF 95 LF — WP 103 LF — PROTECT EXISTING CULVERT — 15' TEMPORARY CONSTRUCTION EASEMENT — SF 59 LF — 25' TEMPORARY CONSTRUCTION EASEMENT — SF 245 LF — EXISTING WETLAND

MATCH LINE

STA 118+00 LOWELL HCL — STA 124+00 LOWELL HCL

TEMPORARY CONSTRUCTION EASEMENT — TOE OF SLOPE — PROPOSED ROW — EXISTING ROW — PROTECT EXISTING CULVERT — SF 68 LF — SF 110 LF — EL 20 LF — SF 83 LF — SF 146 LF — PROTECT EXISTING STORM DRAIN — 1.00'

WETLAND PROTECTION

CONTRACTOR SHALL SUBMIT A PLAN INDICATING THE LOCATION OF PROJECT STAGING AREA, PORTABLE CONCRETE WASHOUT AREAS (2), AND VEHICLE TRACKING MAT FOR APPROVAL BY ADAMS COUNTY PRIOR TO ISSUANCE OF PERMIT

UPPER BASIN — CYD GOLD RAIL LINE — SF 239 LF — SF 59 LF — SF 236 LF

LOWELL BLVD.

LEGEND

EL EROSION LOG	EXISTING ASPHALT PAVEMENT	CF CONSTRUCTION FENCE	
SF SILT FENCE	CW CONCRETE WASHOUT	ASPHALT REMOVAL	
FLOW DIRECTION	LIMIT OF CONSTRUCTION/ TOE OF SLOPE		

20 0 20 40

COLORADO LICENSED GERALD PRUSIK 25083 PROFESSIONAL ENGINEER

Computer File Information				Index of Revisions
Designed By:	GP	Drawn By:	JMP	R-
Creation Date:	12-17-2011	Initials:	DKIM	R-
Last Modification Date:	11-14-2017	Initials:	JMP	R-
Drawing File Name:	.../SHEET/0320PH01-C41X-CSWM1.DWG			R-
AutoCAD Version:	C3D 2014	Units:	English	R-

PREPARED FOR: ADAMS COUNTY, 4430 S. ADAMS COUNTY PARKWAY, BRIGHTON, COLORADO 80601. CONTACT: JENNIFER SIH, PE

PREPARED BY: HUITT-ZOLLARS, 4582 S. Ulster St. Ste 240, Denver, CO 80237, Phone (303) 740-7325, Fax (303) 224-9997. CONTACT: GERALD PRUSIK, PE

LOWELL BOULEVARD IMPROVEMENTS

CLEAR CREEK TO W. 62ND AVENUE

SITE PLAN - INITIAL STORMWATER MANAGEMENT PLAN

Project No. / Code	
ADAMS COUNTY: IMP2013-00009 HUITT-ZOLLARS: 16-0320-01	
Sheet Name	EC-3
Sheet Number	37

PLOTSTAMP: 2017.11.16, 08:28:30 AM

811. Know what's below. Call before you dig.

CONTRACTOR SHALL SUBMIT A PLAN INDICATING THE LOCATION OF PROJECT STAGING AREA, PORTABLE CONCRETE WASHOUT AREAS (2), AND VEHICLE TRACKING MAT FOR APPROVAL BY ADAMS COUNTY PRIOR TO ISSUANCE OF PERMIT

WP WETLAND PROTECTION

STA 112+00 LOWELL HCL — STA 118+00 LOWELL HCL — STA 124+00 LOWELL HCL

MATCH LINE

LOWELL BLVD.

EXISTING STORM DRAIN

EXISTING IRRIGATION PIPE

EXISTING CULVERT

EXISTING ROW

PROPOSED ROW

TOE OF SLOPE

KERSHAW OVERFLOW DITCH

DRAINAGE EASEMENT

EXISTING WETLAND

SLOPE PAVING SEE RD SHEETS

MANHOLE SPECIAL

REFER TO SD SHEETS FOR RIPRAP REQUIREMENTS

LEGEND

EL	EROSION LOG	VTC	VEHICLE TRACKING CONTROL		FLOW DIRECTION		CONCRETE WALK
SF	SILT FENCE	CW	CONCRETE WASHOUT	AB	AGGREGATE BAG		EXISTING ASPHALT PAVEMENT
IP	INLET PROTECTION	SA	STAGING AREA		PLANE	OP	OUTLET PROTECTION PER CDOT STANDARD PLAN 208

— — LIMIT OF CONSTRUCTION/ TOE OF SLOPE

20 0 20 40

Computer File Information				Index of Revisions
Designed By:	GP	Drawn By:	JMP	R-
Creation Date:	12-17-2011	Initials:	DKIM	R-
Last Modification Date:	11-14-2017	Initials:	JMP	R-
Drawing File Name:	.../SHEET/0320PH01-C41X-CSWM2.DWG			R-
AutoCAD Version:	C3D 2014	Units:	English	R-

PREPARED FOR: ADAMS COUNTY, 4430 S. ADAMS COUNTY PARKWAY, BRIGHTON, COLORADO 80601, CONTACT: JENNIFER SHI, PE

PREPARED BY: HUITT-ZOLLARS, 4582 S. Ulster St. Ste 240, Denver, CO 80237, Phone (303) 740-7325, Fax (303) 224-9997, CONTACT: GERALD PRUSIK, PE

COLORADO LICENSED GERALD PRUSIK 25083 PROFESSIONAL ENGINEER

LOWELL BOULEVARD IMPROVEMENTS

CLEAR CREEK TO W. 62ND AVENUE

SITE PLAN - INTERIM STORMWATER MANAGEMENT PLAN

Project No. / Code	
ADAMS COUNTY: IMP2013-00009 HUITT-ZOLLARS: 16-0320-01	
Sheet Name	EC-7
Sheet Number	41

PRINTED AMP 2017.11.10, 08:34:39 AM

811. Know what's below. Call before you dig.

STA 112+00 LOWELL HCL

STA 118+00 LOWELL HCL

MATCH LINE

TOE OF SLOPE

EXISTING STORM DRAIN

EXISTING ROW

PROPOSED ROW

ROW

PL

SM 1,436 SF

SM 463 SF

SRB 224 SF

SM 5,423 SF

SRB 161 SF

LOWELL BLVD.

EXISTING IRRIGATION PIPE

SM 403 SF

SRB 100 SF

SM 195 SF

SM 176 SF

SM 201 SF

SRB 681 SF

SLOPE PAVING SEE RD SHEETS

EXISTING CULVERT

TEMPORARY CONSTRUCTION EASEMENT

REFER TO SD SHEETS FOR RIPRAP REQUIREMENTS

LEGEND

SRB SOIL RETENTION BLANKET (STRAW) W/ 4" TOPSOIL AND SEED

SM SEED AND MULCH AND TACKIFIER W/ 4" TOPSOIL

20 0 20 40

STA 124+00 LOWELL HCL

SM 648 SF

SM 2,375 SF

SOIL RIPRAP (SEE RD SHEETS)

PROPOSED R.O.W.

STORMCEPTOR (STC 2400) OR EQUIVALENT

SM 466 SF

SRB 429 SF

SM 299 SF

SM 311 SF

SRB 123 SF

SRB 276 SF

SM 65 SF

SM 236 SF

SM 918 SF

RIPRAP PROTECTION

COLORADO LICENSED GERALD PRUSIK 25083 PROFESSIONAL ENGINEER

Computer File Information				Index of Revisions
Designed By:	GP	Drawn By:	JMP	R-
Creation Date:	12-17-2011	Initials:	DKIM	R-
Last Modification Date:	11-14-2017	Initials:	JMP	R-
Drawing File Name:	...\SHEET\0320PH01-C41X-CSWM3.DWG			R-
AutoCAD Version:	C3D 2014	Units:	English	R-

PLOTSTAMP: 2017 11 16 08:42:11 AM

PREPARED FOR: ADAMS COUNTY, 4430 S. ADAMS COUNTY PARKWAY, BRIGHTON, COLORADO 80601. CONTACT: JENNIFER SIU, PE

PREPARED BY: HUITT-ZOLLARS, 4582 S. Ulster St. Ste 240, Denver, CO 80237, Phone (303) 740-7325, Fax (303) 224-9997. CONTACT: GERALD PRUSIK PE

LOWELL BOULEVARD IMPROVEMENTS

CLEAR CREEK TO W. 62ND AVENUE

SITE PLAN - FINAL STORMWATER MANAGEMENT PLAN

Project No. / Code	
ADAMS COUNTY: IMP2013-00003 HUITT-ZOLLARS: 16-0320-01	
Sheet Name	EC-11
Sheet Number	45

811. Know what's below. Call before you dig.

* THE CONTRACTOR SHALL COORDINATE WITH THE PROPERTY OWNER TO FACILITATE THE SHUTDOWN OF EXISTING UTILITIES AND DISPOSITION OF EXISTING METERS.

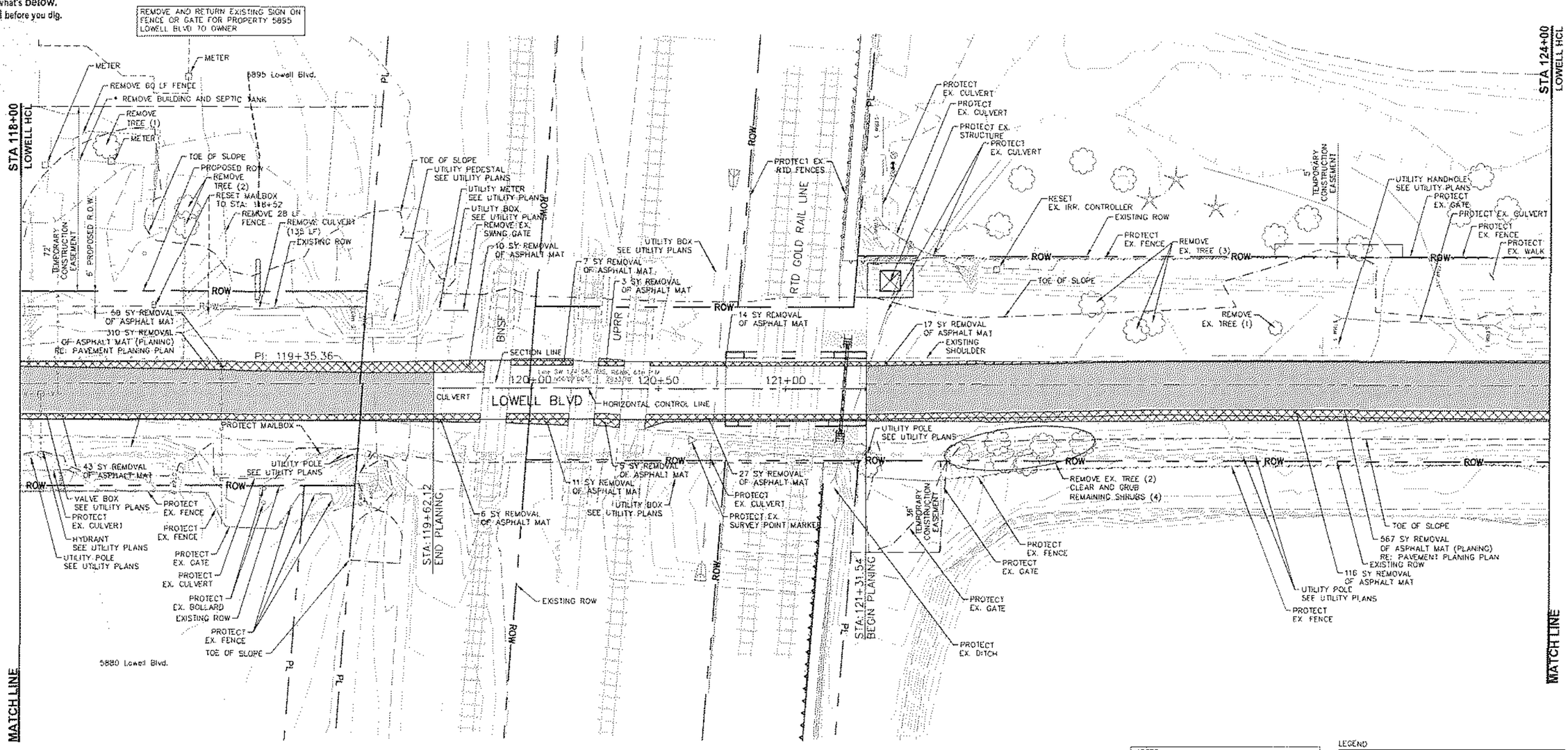

NOTES:
1. FOR RESETS AND ADJUSTMENTS OF SIGNS AND UTILITIES, REFER TO THE SIGNING AND STRIPING PLANS AND THE UTILITY PLANS
2. REFER TO TABULATION OF FENCE FOR FENCE REMOVALS AND RESETS
3. ALL GATES, STRUCTURES, AND FENCES WILL BE REPLACED IN KIND UNLESS OTHERWISE VERIFIED IN WRITING BY THE CONTRACTOR AND PROJECT OWNER.
4. THE CONTRACTOR SHALL COORDINATE THE RETURN OF ANY PRIVATE SIGN DESIGNATED TO BE REMOVED IN THIS PLAN SET WITH THE SIGN OWNER.

LEGEND

- REMOVAL OF ASPHALT MAT
- REMOVAL OF ASPHALT MAT (PLANING)
- CONSTRUCTION LIMITS
- APPROX. WETLAND LIMIT

20 0 20 40

Computer File Information			
Designed By:	GP	Drawn By:	JMP
Creation Date:	12-17-2011	Initials:	DKIM
Last Modification Date:	11-14-2017	Initials:	JMP
Drawing File Name:	.../SHEET/0320PHD1-C01X-DEM.DWG		
AutoCAD Version:	C3D 2014	Units:	English

Index of Revisions

R-		
R-		
R-		
R-		
R-		

PREPARED FOR: ADAMS COUNTY, 4430 S. ADAMS COUNTY PARKWAY, BRIGHTON, COLORADO 80601. CONTACT: JENNIFER SHI, PE

PREPARED BY: HUITT-ZOLLARS, 4582 S. Ulster St. Ste 240, Denver, CO 80237, Phone (303) 740-7325, Fax (303) 224-9997. CONTACT: GERALD PRUSIK, PE

COLORADO LICENSED GERALD PRUSIK 25083 PROFESSIONAL ENGINEER

LOWELL BOULEVARD IMPROVEMENTS
CLEAR CREEK TO W. 62ND AVENUE

DEMOLITION AND MISC. RESETS PLAN

Project No. / Code	ADAMS COUNTY: IMP2013-00009 HUITT-ZOLLARS: 16-0320-01
Sheet Name	DM-4
Sheet Number	51

PRINTSTAMP: 2017.11.10 09:05:57 AM

811 Know what's below. Call before you dig.

SEE SHEET RD-8 FOR IMPROVEMENT AT RAILROAD CROSSING

STA 118+00 LOWELL HCL

STA 124+00 LOWELL HCL

MATCH-EXISTING
5895 DRIVEWAY SEE SHEET DR-9
STORM SOUTH SEE SHEET SD-4
STA:118+25.34, 19.66' LT
℄ DRIVEWAY, FL EL:5230.51
TOE OF SLOPE
190 SY FULL DEPTH HMA
PROPOSED ROW
EXISTING ROW
118 SY CURB, GUTTER, AND SIDEWALK TYPE 2 (SECTION IIB)
119+31.96, 33.97' LT END SIDEWALK TYPE 2 (SECTION IIB)
INLET PROTECTION SEE SD-4
SOIL RIPRAP SEE SD-4
LATERAL 1 SEE SHEET SD-7
50 SY SIDEWALK STA:119+62.13, 0.05' LT
FL PI EL:5232.32
STA:119+72.64, 16.90' LT
FL PI EL:5232.10
27 SY SIDEWALK
TOE OF SLOPE
11 SY SIDEWALK
31 SY SIDEWALK STA:120+63.08, 14.02' LT
FL PI EL:5231.62
RTD GOLD RAIL LINE
GUTTER TYPE 2 (2 FOOT) 30 LF
GUTTER TYPE 2 (2 FOOT) 20 LF
GUTTER TYPE 2 (2 FOOT) 24 LF
GUTTER TYPE 2 (2 FOOT) 10 LF
SECTION LINE
HORIZONTAL CONTROL LINE
PROTECT EX. GATES
LOWELL BLVD
BEGIN SLOPE PAVING AND GUARDRAIL TYPE 3 WITH END ANCHORAGE TYPE 3K
AGGREGATE BASE COURSE (CL6)(6" THICK) 5 TON
SOIL RIPRAP SEE SD-4
STA: 119+06.39
PI: 119+73.38
DRAINAGE EASEMENT
GUTTER TYPE 2 (2 FOOT) 18 LF
TOE OF SLOPE
14.5 SY SIDEWALK
119+53.22, 24.61' RT END SIDEWALK TYPE 2 (SECTION IIB)
45 SY CURB, GUTTER, AND SIDEWALK TYPE 2 (SECTION IIB)
STA:119+35.52, 13.99' RT
FL PI EL:5231.82
OUTLET PROTECTION SEE SD-4
FES-119-R
GUTTER TYPE 2 (2 FOOT) 24 LF
13.5 SY SIDEWALK
GUTTER TYPE 2 (2 FOOT) 10 LF
5 SY SIDEWALK
GUTTER TYPE 2 (2 FOOT) 31 LF
18 SY SIDEWALK
TEMPORARY CONSTRUCTION EASEMENT
BOLLARDS SEE DEMO PLAN
STA:118+87.98, 16.18'
℄ DRIVEWAY, FL EL:5231.23
5880 DRIVEWAY SEE SHEET DR-8
7 CY CONC SLOPE PAVING
AGGREGATE BASE COURSE (CL6)(6" THICK) 4 TON
GUARDRAIL TYPE 3 (25 LF)
STA: 119+52.62
END SLOPE PAVING AND GUARDRAIL TYPE 3 WITH END ANCHORAGE TYPE 3K
31 CY CONC SLOPE PAVING
EXISTING ROW
58 SY CURB, GUTTER, AND SIDEWALK TYPE 2 (SECTION IIB)
58 SY HMA PATCH
310 SY HMA OVERLAY
STA: 118+70.23
END SLOPE PAVING
SOIL RIPRAP SEE SD-4
TIE TO EXISTING STA:121+31.72, 14.02' LT
FL PI EL:5231.15
19 SY SIDEWALK
121+47.13, 28.62' LT BEGIN SIDEWALK TYPE 2 (SECTION IIB)
MH-121-L
TOE OF SLOPE
185 SY CURB, GUTTER, AND SIDEWALK TYPE 2 (SECTION IIB)
PROTECT EX. GATES PI: 121+31.65
PI: 122+46.14
121+70.12, 19.46' RT BEGIN SIDEWALK TYPE 2 (SECTION IIB)
121+70.07, 20.90' RT BEGIN RETAINING WALL AND BRIDGE RAIL
STA:121+52.61, 14.53' RT
℄ DRIVEWAY, FL EL:5231.15
LAKE ACCESS SEE SHEET DR-8
8 SY SIDEWALK STA:121+28.71, 13.98' RT
FL PI EL:5231.16
NORTH LATERAL SEE SHEET SD-4
157 SY HMA PATCH
122+83.92, 32.08' LT END SIDEWALK TYPE 2 (SECTION IIB)
STA:122+81.49, 18.02' LT
FL PI EL:5228.83
93 SY SIDEWALK STA:123+09.13, 18.02' LT
FL PI EL:5227.74
I-123-L INLET WITH DITCH PAVING (2 CY)
TEMPORARY CONSTRUCTION EASEMENT
EXISTING ROW
TIE TO EXISTING
PROTECT EX. WALK
HMA (4" THICK) 19 TON
6.43%
HORIZONTAL CONTROL LINE/SECTION LINE
30 LF CURB, GUTTER, TYPE 2 (SECTION IIB)
INSTALL 228 LF BRIDGE RAIL TYPE 10H (SPECIAL)
192 SY CURB, GUTTER, AND SIDEWALK TYPE 2 (SECTION IIB)
567 SY HMA OVERLAY
STA:122+48.74, 13.98' RT
FL PI EL:5229.25
122+48.68, 20.90' RT PI RETAINING WALL
59 SY HMA PATCH

PROFILE SHOWN AT RAIL CROSSING IS FOR INFORMATION ONLY. CONTRACTOR SHALL MATCH EXISTING PAVEMENT ELEVATION NORTH AND SOUTH OF THE RAILS. (STATIONING IS APPROXIMATE)

PVI STA = 118+91.00
PVI ELEV = 5231.87
L = 42.00'
K = 83.8
PVC STA = 118+70.00 ELEV = 5231.66
PVT STA = 119+12.00 ELEV = 5231.97
PVI STA = 119+41.12
PVI ELEV = 5232.12
L = 42.00'
K = 89.1
PVC STA = 119+20.12 ELEV = 5232.01
PVT STA = 119+62.12 ELEV = 5232.32
PVI STA = 122+42.00
PVI ELEV = 5229.69
L = 84.00'
K = 145.7
PVC STA = 122+00.00 ELEV = 5230.35
PVT STA = 122+84.00 ELEV = 5229.27
GB STA = 118+09.00 ELEV = 5230.96
GB STA = 121+31.55 ELEV = 5231.43
GB STA = 123+26.50 ELEV = 5228.84
GB STA = 123+79.00 ELEV = 5228.15
PROPOSED GRADE
EXISTING GRADE
1.00%
0.50%
0.97%
-1.58%
-1.00%
-1.42%
-1.03%
LOWELL BLVD
MATCH LINE

5244 5240 5236 5232 5228

118+00 118+50 119+00 119+50 120+00 120+50 121+00 121+50 122+00 122+50 123+00 123+50 124+00

LEGEND
- FULL DEPTH HMA
- HMA OVERLAY
- HMA PATCH
- CONCRETE WALK
- APPROX. WETLAND LIMIT
- SLOPE PAVING
- SOIL RIPRAP

20 0 20 40

Computer File Information			
Designed By:	GP	Drawn By:	JMP
Creation Date:	12-17-2011	Initials:	DKIM
Last Modification Date:	11-14-2017	Initials:	JMP
Drawing File Name:	.../SHEET/0320PH01-C10X-CST.DWG		
AutoCAD Version:	C3D 2014	Units:	English

Index of Revisions
R-
R-
R-
R-
R-

PREPARED FOR: ADAMS COUNTY, 4430 S. ADAMS COUNTY PARKWAY, BRIGHTON, COLORADO 80601, CONTACT: JENNIFER SHI, PE

PREPARED BY: HUITT-ZOLLARS, 4582 S. Ulster St. Ste 240, Denver, CO 80237, Phone (303) 740-7325, Fax (303) 224-9997, CONTACT: GERALD PRUSIK, PE

COLORADO LICENSED GERALD PRUSIK 25083 PROFESSIONAL ENGINEER

LOWELL BOULEVARD IMPROVEMENTS
CLEAR CREEK TO W. 62ND AVENUE

ROADWAY PLAN AND PROFILE

Project No. / Code	
ADAMS COUNTY: IMP2013-00009 HUITT-ZOLLARS: 16-0320-01	
Sheet Name	RD-4
Sheet Number	61

PRINTSTAMP: 2017.11.13 01:48:08 PM

811.
Know what's below.
Call before you dig.

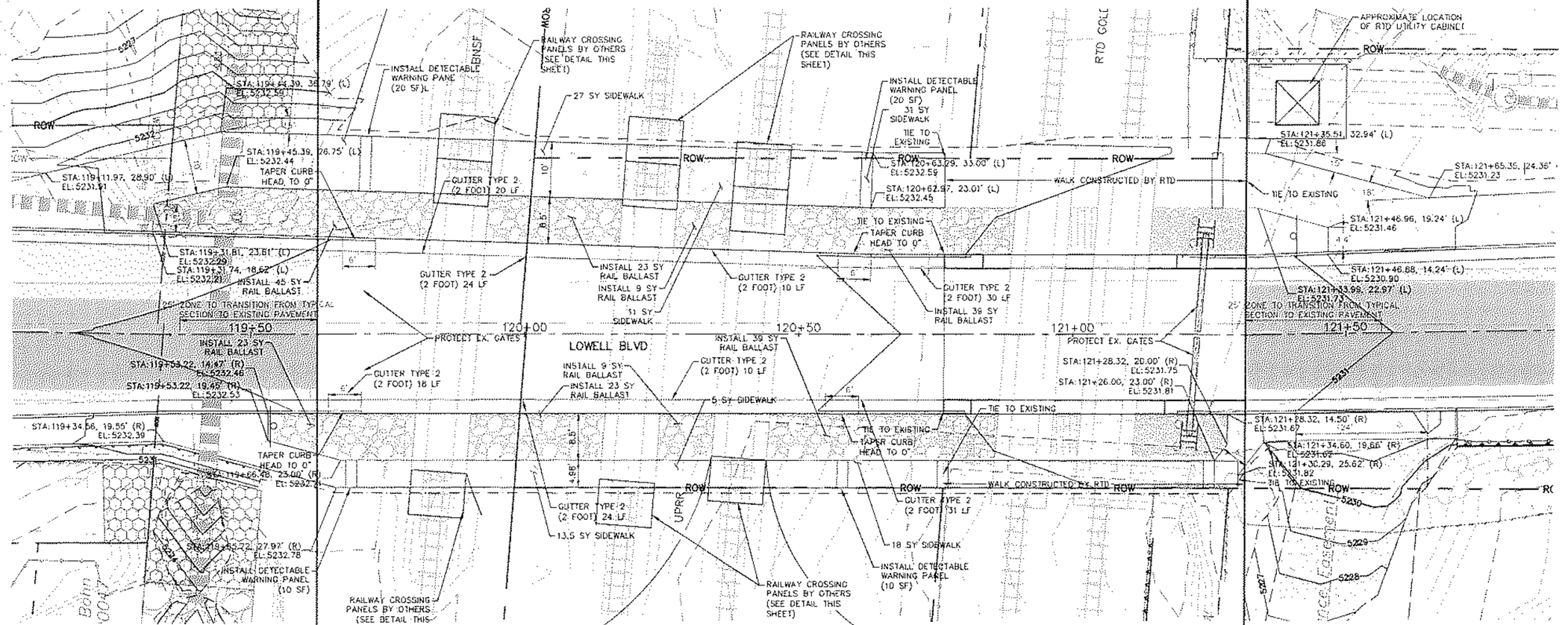

LEGEND

- FULL DEPTH HMA
- HMA OVERLAY
- HMA PATCH
- CONCRETE WALK
- RAIL BALLAST
- SOIL RIPRAP

Computer File Information			
Designed By:	GP	Drawn By:	JMP
Creation Date:	12-17-2011	Initials:	DKIM
Last Modification Date:	11-14-2017	Initials:	JMP
Drawing File Name:	.../SHEET/0320PH01-C11X-CST.DWG		
AutoCAD Version:	C3D 2014	Units:	English

Index of Revisions

R-
R-
R-
R-
R-1911

PREPARED FOR
ADAMS COUNTY
4430 S. ADAMS COUNTY PARKWAY
BRIGHTON, COLORADO 80601
CONTACT: JENNIFER SHI, PE

PREPARED BY
HUITT-ZOLLARS
4582 S. Ulster St. Ste 240 Denver, CO 80237
Phone (303) 740-7325 Fax (303) 224-9997
CONTACT: GERALD PRUSIK, PE

COLORADO LICENSED
GERALD PRUSIK
25083
PROFESSIONAL ENGINEER

LOWELL BOULEVARD IMPROVEMENTS
CLEAR CREEK TO W. 62ND AVENUE

RAILROAD CROSSING DETAIL

Project No. / Code	
ADAMS COUNTY: IMP2013-00009 HUITT-ZOLLARS: 16-0320-01	
Sheet Name	RD-8
Sheet Number	65

PRINTSTAMP: 2017.11.10 09:57:20 AM

811.
Know what's below.
Call before you dig.

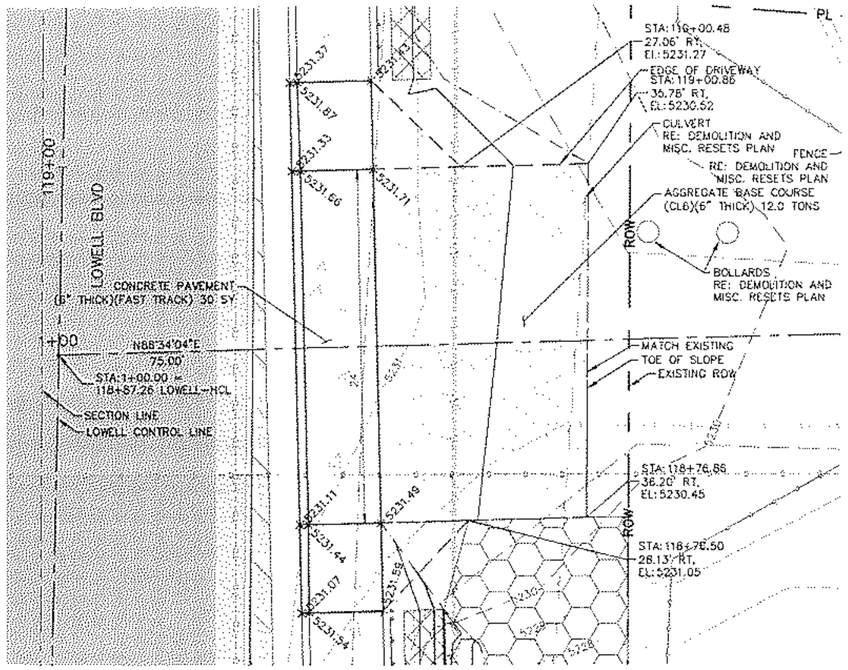

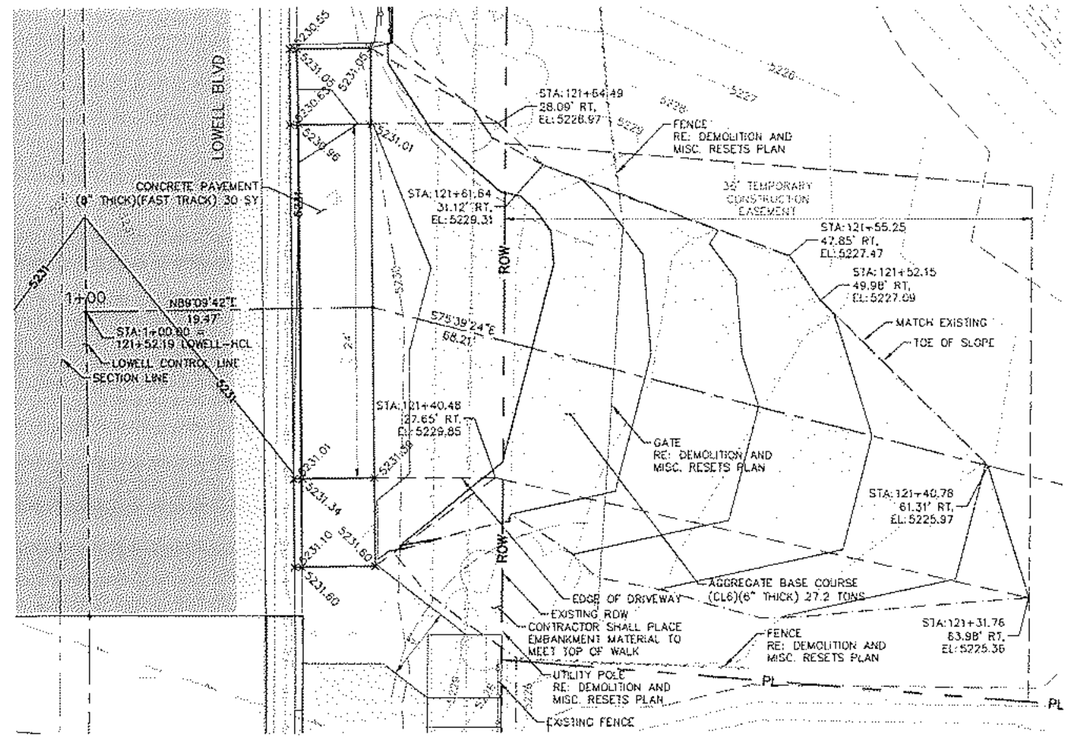

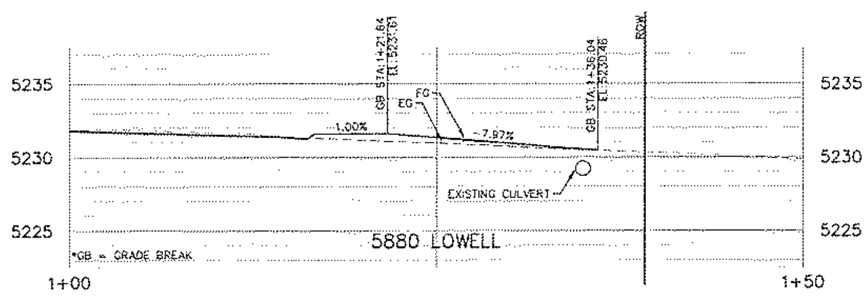

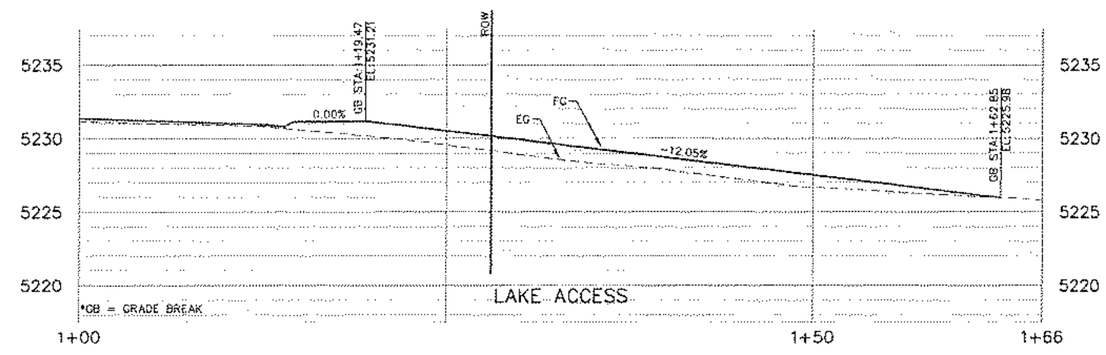

NOTES:

1. CONTRACTOR SHALL MATCH EXISTING DRIVEWAY MATERIAL AND WIDTH FROM BACK OF WALK TO EXISTING GRADE
2. REFER TO TX-1 FOR DRIVEWAY PAVEMENT SECTIONS

LEGEND

CONCRETE PAVEMENT — HMA

AGGREGATE BASE COURSE

N

5 0 5 10
HOR: 1" = 5'
VER: 1" = 10'

Computer File Information			
Designed By:	GP	Drawn By:	JMP
Creation Date:	12-17-2011	Initials:	DKIM
Last Modification Date:	11-14-2017	Initials:	JMP
Drawing File Name:	.../SHEET/0320PH01-C10X-CST4.DWG		
AutoCAD Version:	C3D 2014	Units:	English

Index of Revisions

R-		
R-		
R-		
R-		
R-		

PREPARED FOR
ADAMS COUNTY
4430 S. ADAMS COUNTY PARKWAY
BRIGHTON, COLORADO 80601
CONTACT: JENNIFER SHI, PE

PREPARED BY
HUITT-ZOLLARS
4582 S. Ulster St. Ste 240 Denver, CO 80237
Phone (303) 740-7325 Fax (303) 224-9997
CONTACT: GERALD PRUSIK, PE

COLORADO LICENSED
GERALD PRUSIK
25083
PROFESSIONAL ENGINEER

LOWELL BOULEVARD IMPROVEMENTS
CLEAR CREEK TO W. 62ND AVENUE

DRIVEWAY DETAILS

Project No. / Code	
ADAMS COUNTY: IMP2013-00009 HUITT-ZOLLARS: 16-0320-01	
Sheet Name	DR-8
Sheet Number	74

DRWGNAME: 2017.11.16_1:01:18 AM

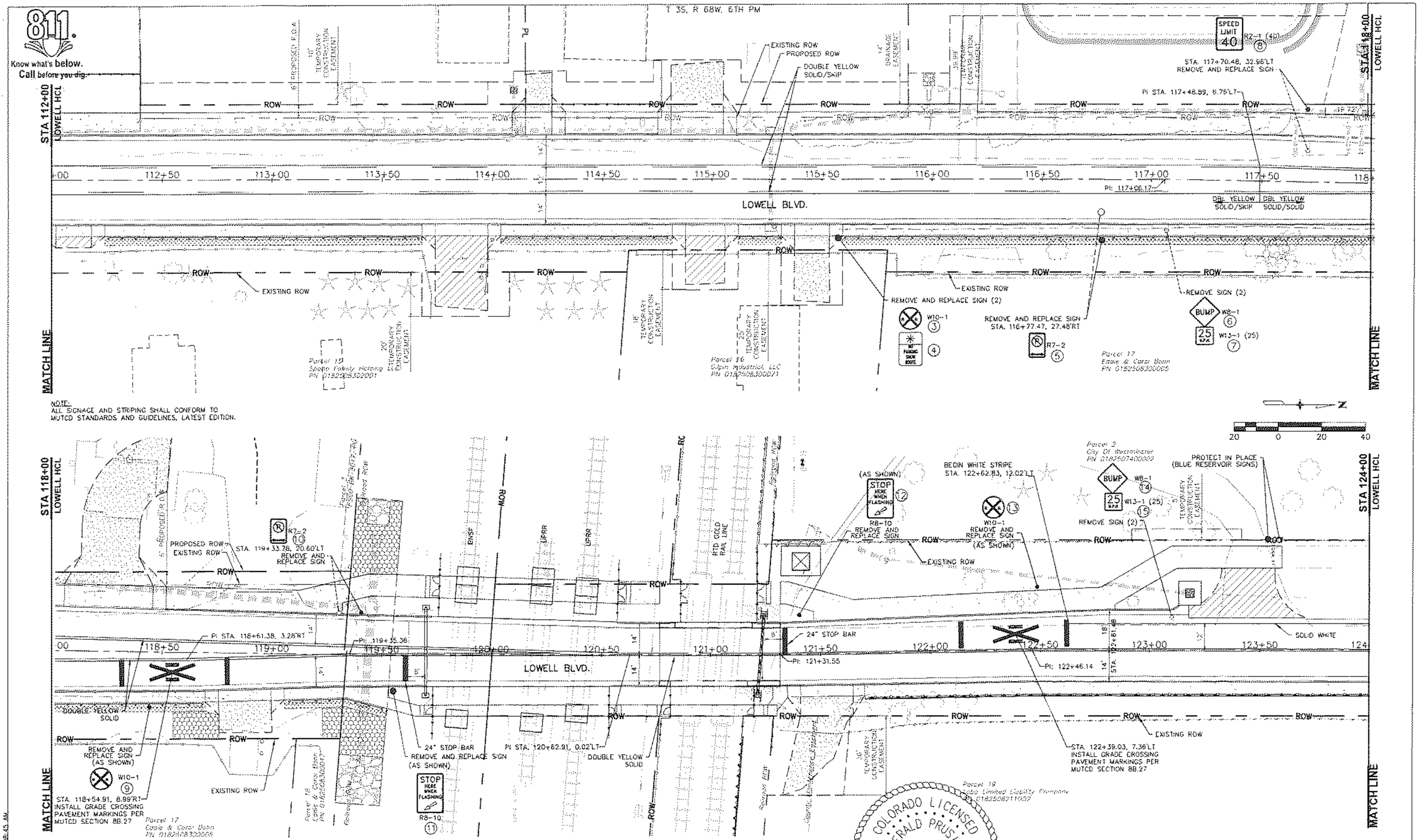

Computer File Information			
Designed By:	GP	Drawn By:	JMP
Creation Date:	12-17-2011	Initials:	DKIM
Last Modification Date:	11-14-2017	Initials:	JMP
Drawing File Name:	../SHEET/0320PH01-C20X-CSS.DWG		
AutoCAD Version:	C3D 2014	Units:	English

Index of Revisions

R-	
R-	
R-	
R-	
R-	

PREPARED FOR
ADAMS COUNTY
4430 S. ADAMS COUNTY PARKWAY
BRIGHTON, COLORADO 80601
CONTACT: JENNIFER SHI, PE

PREPARED BY
HUITT-ZOLLARS
4582 S. Ulster St. Ste 240 Denver, CO 80237
Phone (303) 740-7325 Fax (303) 224-9997
CONTACT: GERALD PRUSIK, PE

COLORADO LICENSED
GERALD PRUSIK
25083
PROFESSIONAL ENGINEER

LOWELL BOULEVARD IMPROVEMENTS

CLEAR CREEK TO W. 62ND AVENUE

SIGNING AND STRIPING PLANS

Project No. / Code	
ADAMS COUNTY: IMP2013-00009 HUITT-ZOLLARS: 16-0320-01	
Sheet Name	SS-2
Sheet Number	80

PRINTSTAMP: 2017.11.10 11:08:45 AM

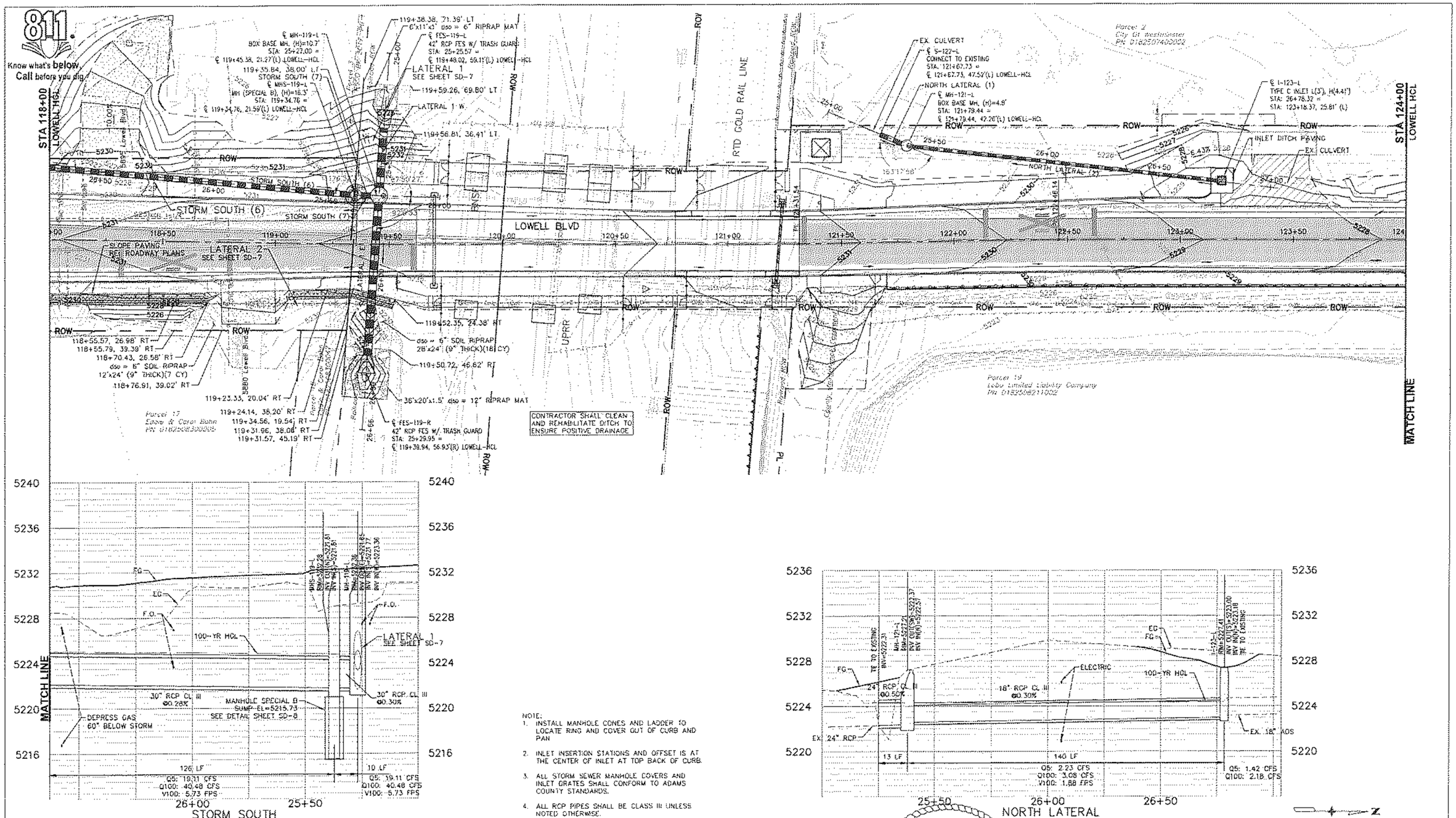

NOTE:
1. INSTALL MANHOLE CONES AND LADDER TO LOCATE RING AND COVER OUT OF CURB AND PAN
2. INLET INSERTION STATIONS AND OFFSET IS AT THE CENTER OF INLET AT TOP BACK OF CURB.
3. ALL STORM SEWER MANHOLE COVERS AND INLET GRATES SHALL CONFORM TO ADAMS COUNTY STANDARDS.
4. ALL RCP PIPES SHALL BE CLASS III UNLESS NOTED OTHERWISE.

SCALE:
HORIZ: 1"=40'
VERT: 1"=8'

COLORADO LICENSED
GERALD PRUSIK
25083
PROFESSIONAL ENGINEER

Computer File Information			
Designed By:	GP	Drawn By:	JMP
Creation Date:	12-17-2011	Initials:	DKIM
Last Modification Date:	11-14-2017	Initials:	JMP
Drawing File Name:	.../SHEET/0320PH01-C50X-CSD.DWG		
AutoCAD Version:	C3D 2014	Units:	English

Index of Revisions

PREPARED FOR
ADAMS COUNTY
4430 S. ADAMS COUNTY PARKWAY
BRIGHTON, COLORADO 80601
CONTACT: JENNIFER SHE, PE

PREPARED BY
HUITT-ZOLLARS
4582 S. Ulster St. Ste 240
Denver, CO 80237
Phone (303) 740-7325
Fax (303) 224-9997
CONTACT: GERALD PRUSIK, PE

LOWELL BOULEVARD IMPROVEMENTS
CLEAR CREEK TO W. 62ND AVENUE

STORM DRAIN
PLAN AND PROFILE

Project No. / Code
ADAMS COUNTY: IMP2013-00009
HUITT-ZOLLARS: 16-0320-01

Sheet Name SD-4
Sheet Number 87

PRINTSTAMP: 2017.11.10 11:19:00 AM

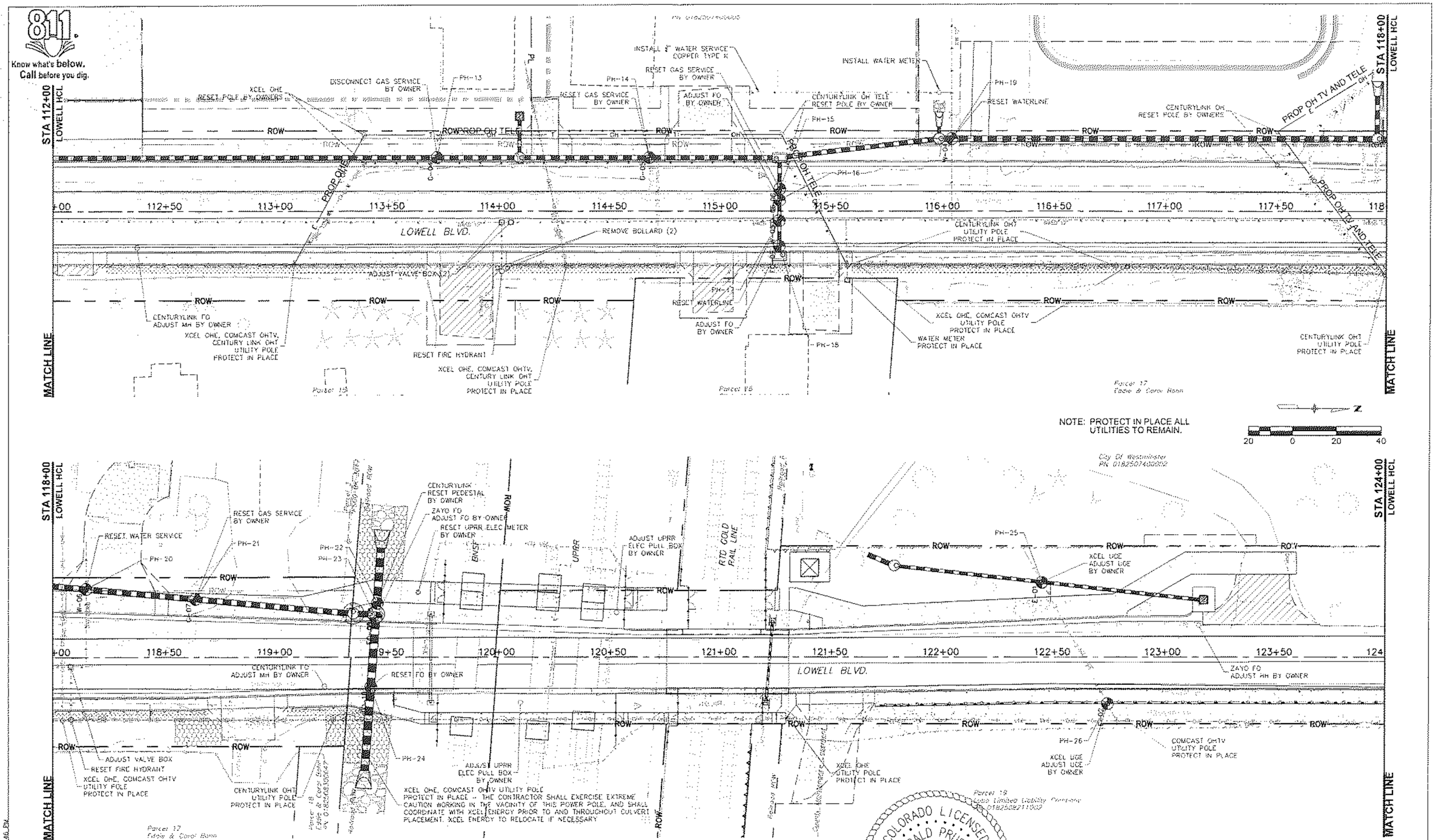

Computer File Information				Index of Revisions
Designed By:	GP	Drawn By:	JMP	R-
Creation Date:	12-17-2011	Initials:	JMP	R-
Last Modification Date:	11-14-2017	Initials:	DKIM	R-
Drawing File Name:	.../SHEET/0320PH01-C70X-CUT.DWG			R-
AutoCAD Version:	C3D 2014	Units:	English	R-

PREPARED FOR
ADAMS COUNTY
4430 S. ADAMS COUNTY PARKWAY
BRIGHTON, COLORADO 80601
CONTACT: JENNIFER SIX, PE

PREPARED BY
HUITT-ZOLLARS
4582 S. Ulster St. Ste 240 Denver, CO 80237
Phone (303) 740-7325 Fax (303) 224-9997
CONTACT: GERALD PRUSIK, PE

COLORADO LICENSED
GERALD PRUSIK
25083
PROFESSIONAL ENGINEER

LOWELL BOULEVARD IMPROVEMENTS
CLEAR CREEK TO W. 62ND AVENUE

UTILITY PLAN

Project No. / Code	ADAMS COUNTY: IMP2013-00009 HUITT-ZOLLARS: 16-0320-01
Sheet Name	UT-2
Sheet Number	95

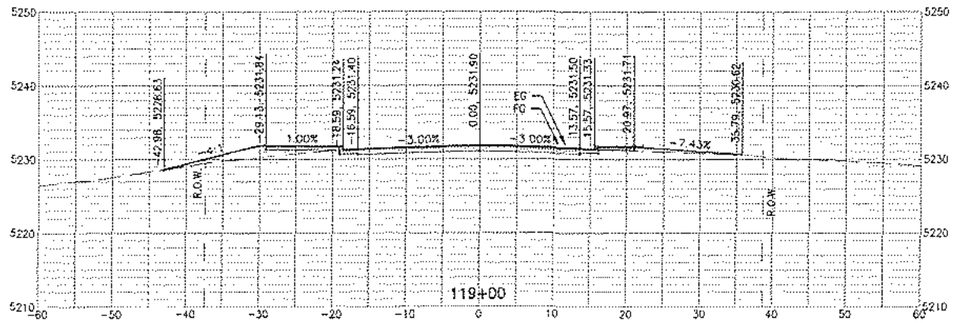

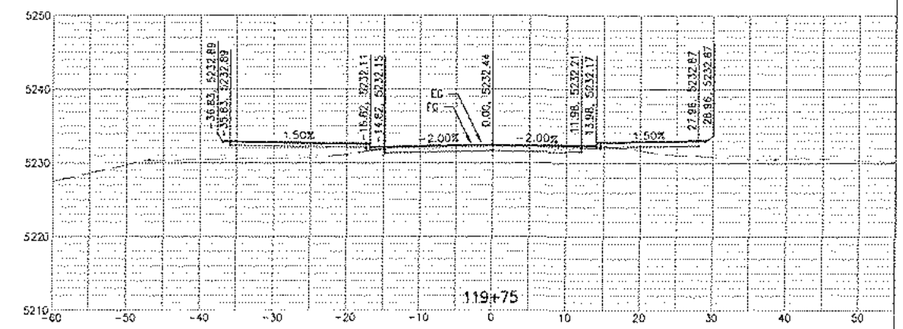

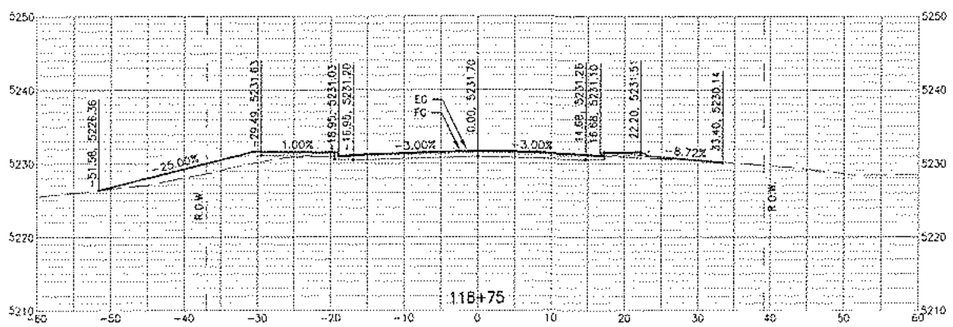

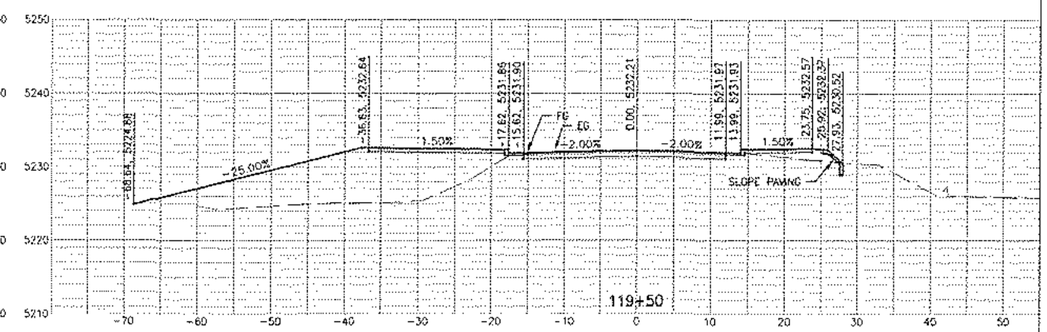

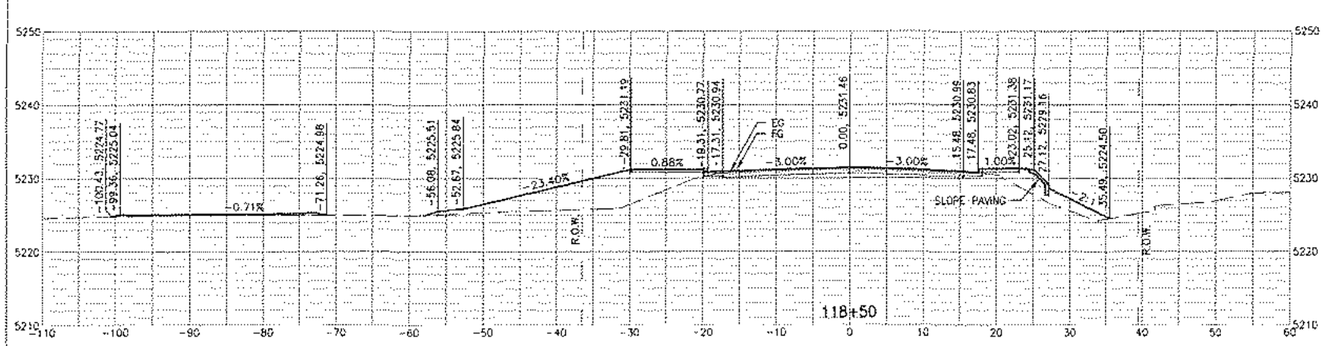

SCALE:
1"=20' HORIZ
1"=20' VERT

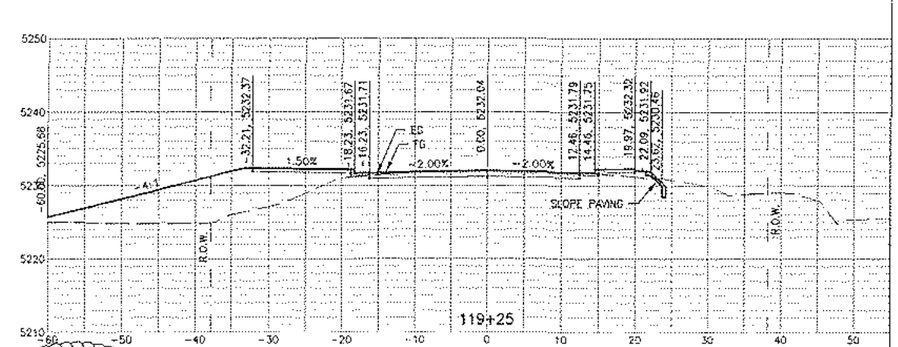

COLORADO LICENSED
GERALD PRUSIK
25083
PROFESSIONAL ENGINEER

Computer File Information				Index of Revisions		
Designed By:	GP	Drawn By:	JMP	R-		
Creation Date:	12-17-2011	Initials:	DKIM	R-		
Last Modification Date:	11-14-2017	Initials:	JMP	R-		
Drawing File Name:	.../SHEET/032DPH01-C90X-XS-2.DWG			R-		
AutoCAD Version:	C3D 2014	Units:	English	R-		

PREPARED FOR
ADAMS COUNTY
4430 S. ADAMS COUNTY PARKWAY
BRIGHTON, COLORADO 80601
CONTACT: JENNIFER SHE, PE

PREPARED BY
HUITT-ZOLLARS
4582 S. Ulster St. Ste 240 Denver, CO 80237
Phone (303) 740-7325 Fax (303) 224-9997
CONTACT: GERALD PRUSIK, PE

LOWELL BOULEVARD IMPROVEMENTS
CLEAR CREEK TO W. 62ND AVENUE

ROADWAY
CROSS SECTIONS

Project No. / Code	
ADAMS COUNTY: IMP2013-00009 HUITT-ZOLLARS: 16-0320-01	
Sheet Name	XS-15
Sheet Number	117

PRINTSTAMP: 2017.11.16 12:47:03 PM

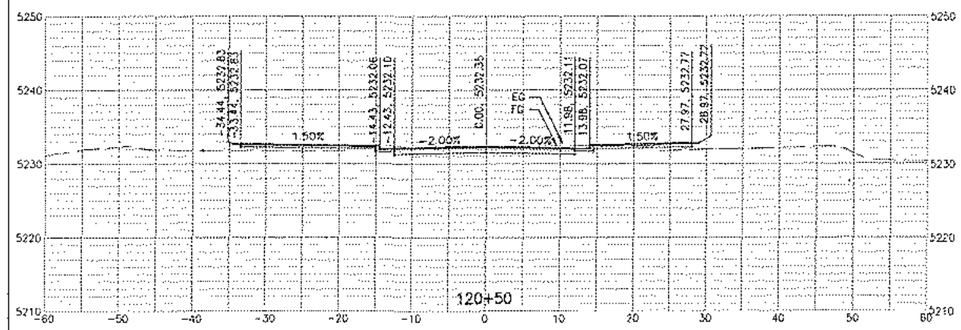

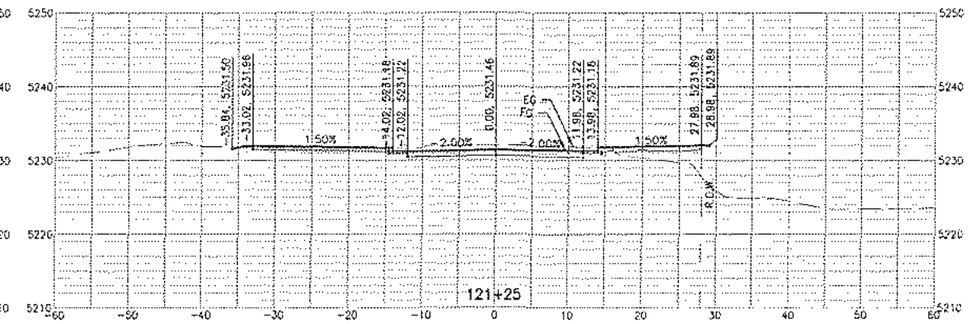

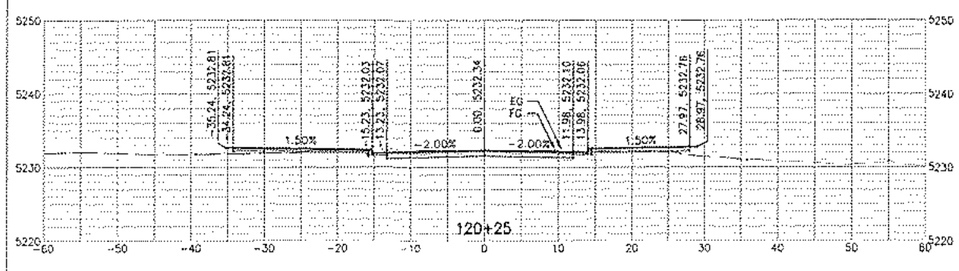

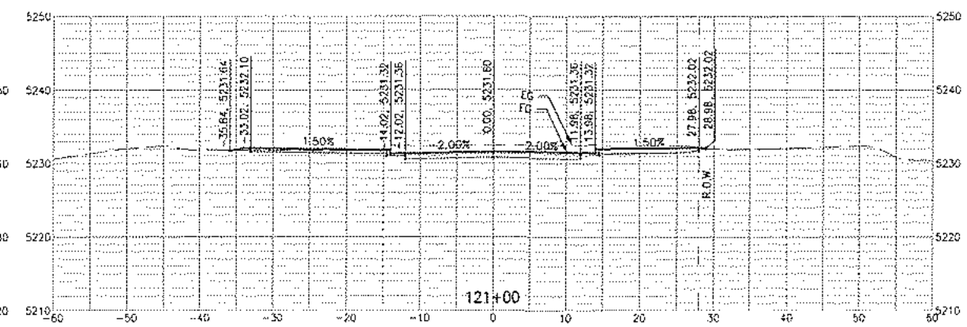

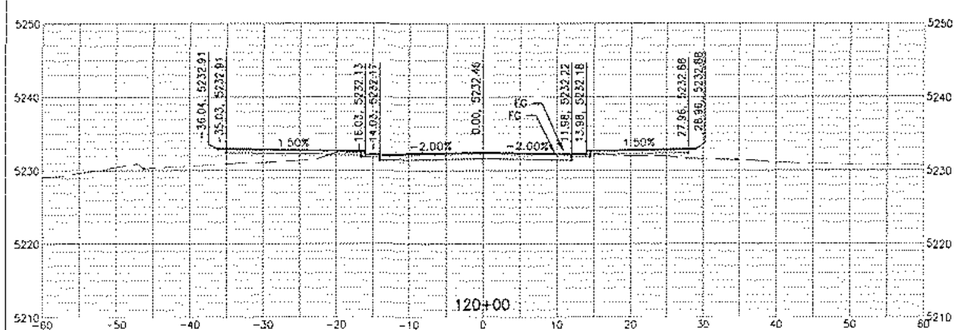

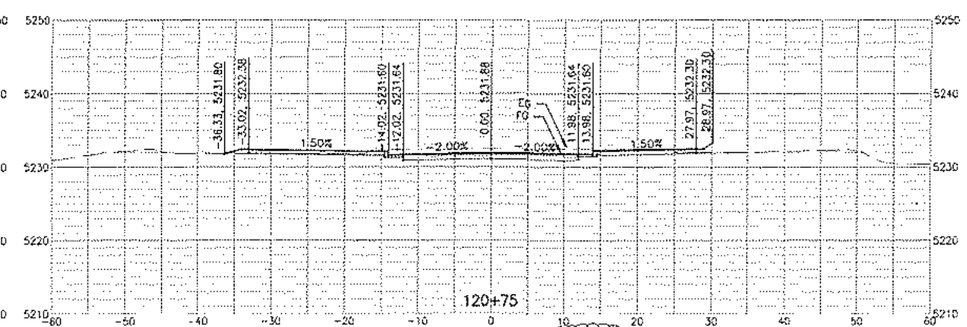

SCALE:
1"=20' HORIZ
1"=20' VERT

COLORADO LICENSED
GERALD PRUSIK
25083
PROFESSIONAL ENGINEER

Computer File Information			
Designed By:	GP	Drawn By:	JMP
Creation Date:	12-17-2011	Initials:	DKIM
Last Modification Date:	11-14-2017	Initials:	JMP
Drawing File Name:	.../SHEET/0320PH01-C90X-XS-2.DWG		
AutoCAD Version:	C3D 2014	Units:	English

Index of Revisions

R:
R:
R:
R:
R:

PREPARED FOR
ADAMS COUNTY
4430 S. ADAMS COUNTY PARKWAY
BRIGHTON, COLORADO 80601
CONTACT: JENNIFER SIH, PE

PREPARED BY
HUITT-ZOLLARS
4582 S. Ulster St. Ste 240
Phone (303) 740-7325
Denver, CO 80237
Fax (303) 224-9997
CONTACT: GERALD PRUSIK, PE

LOWELL BOULEVARD IMPROVEMENTS
CLEAR CREEK TO W. 62ND AVENUE

ROADWAY
CROSS SECTIONS

Project No. / Code	
ADAMS COUNTY: IMP2013-00009 HUITT-ZOLLARS: 16-0320-01	
Sheet Name	XS-16
Sheet Number	118

PRINTSTAMP: 2017.11.10 12:43:51 PM

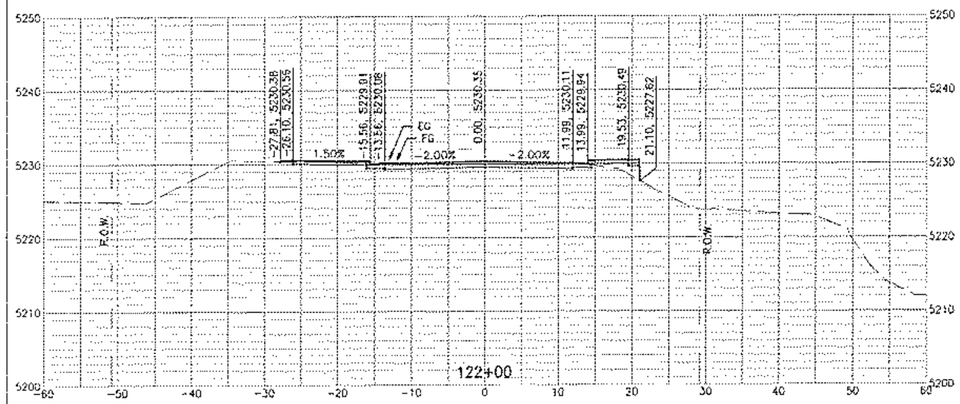

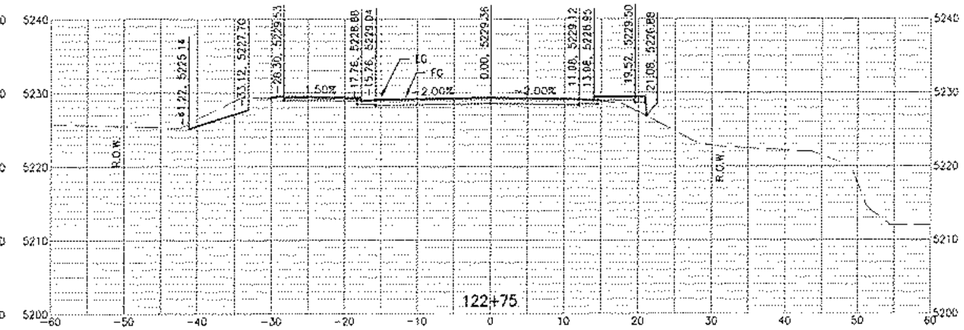

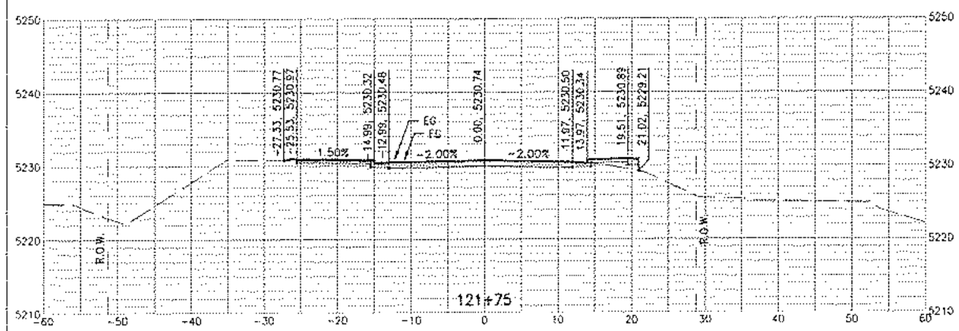

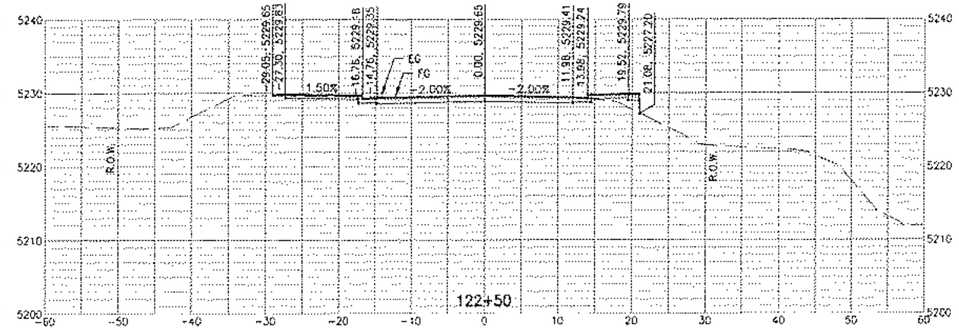

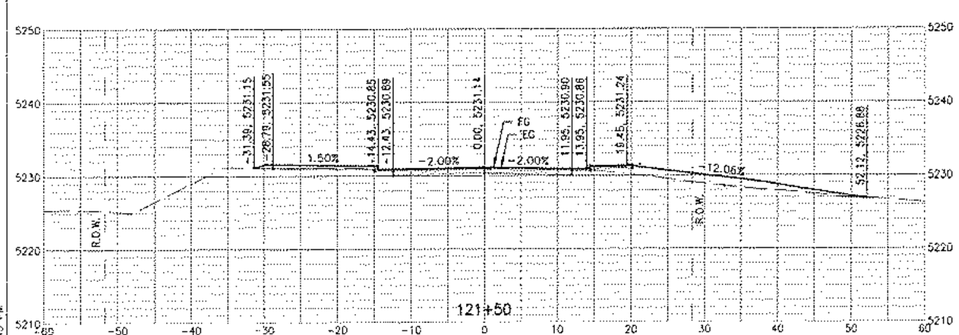

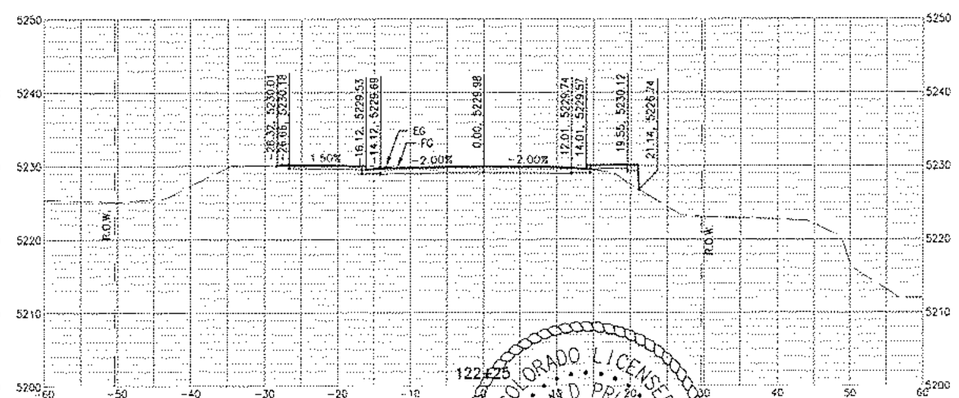

SCALE:
1"=20' HORIZ
1"=20' VERT

Computer File Information			
Designed By:	GP	Drawn By:	JMP
Creation Date:	12-17-2011	Initials:	DKIM
Last Modification Date:	11-14-2017	Initials:	JMP
Drawing File Name:	.../SHEET/0320PH01-C90X-XS-2.DWG		
AutoCAD Version:	C3D 2014	Units:	English

Index of Revisions		
R-		
R-		
R-		
R-		
R-		

PREPARED FOR
ADAMS COUNTY
4430 S. ADAMS COUNTY PARKWAY
BRIGHTON, COLORADO 80601
CONTACT: JENNIFER SHE, PE

PREPARED BY
HUITT-ZOLLARS
4562 S. Ulster St. Ste 240 Denver, CO 80237
Phone (303) 740-7325 Fax (303) 224-9997
CONTACT: GERALD PRUSIK, PE

COLORADO LICENSED
GERALD PRUSIK
25083
PROFESSIONAL ENGINEER

LOWELL BOULEVARD IMPROVEMENTS
CLEAR CREEK TO W. 62ND AVENUE

ROADWAY
CROSS SECTIONS

Project No. / Code	
ADAMS COUNTY: IMP2013-00009 HUITT-ZOLLARS: 16-0320-01	
Sheet Name	XS-17
Sheet Number	119

PRINTSTAMP: 2017-11-10 12:44:16 PM

PUBLIC HEARING AGENDA ITEM

DATE OF PUBLIC HEARING: May 19, 2020
SUBJECT: Private Residential Access Maintenance Agreement with Oak Leaf Solar 37 LLC
FROM: Jill Jennings Golich, Director
AGENCY/DEPARTMENT: Community and Economic Development
HEARD AT STUDY SESSION ON: N/A
AUTHORIZATION TO MOVE FORWARD: ☐ **YES** ☐ **NO**
RECOMMENDED ACTION: That the Board of County Commissioners approves the Access Maintenance Agreement with Oak Leaf Solar 37 LLC which places the responsibility of continuous maintenance for adequate access along a section of 48th Avenue west of Imboden Road on the property owner.

BACKGROUND:

The Owner shall be responsible for the maintenance of 48th Avenue right-of-way from Imboden Road west to where the Owner access leaves the right-of-way of 48th Avenue as a private access in perpetuity, or until such time as 48th Avenue is designed and constructed to County standards, or until such time as this agreement is superseded by a subsequent Private Residential Access Maintenance Agreement that has been approved by the Board of County Commissioners.

The subject request is consistent with the requirement for approval of the Private Residential Access Maintenance Agreement. In addition, staff reviewed the Access Maintenance Agreement and determined that the proposed improvements conform to the requirements outlined in Section 5-03-03-10 of the County's Development Standard and Regulations. These Standards require a property owner to construct and maintain private roads.

The Department of Community and Economic Development also reviewed construction documents associated with the development. Final acceptance of the project is contingent upon approval of the Private Residential Access Maintenance Agreement.

AGENCIES, DEPARTMENTS OR OTHER OFFICES INVOLVED:

Public Works Department

ATTACHED DOCUMENTS:

Private Residential Access Maintenance Agreement with Oak Leaf Solar 37 LLC

FISCAL IMPACT:

Please check if there is no fiscal impact ☒. If there is fiscal impact, please fully complete the section below.

Fund:	
Cost Center:	

	Object Account	Subledger	Amount
Current Budgeted Revenue:			
Additional Revenue not included in Current Budget:			
Total Revenues:			

	Object Account	Subledger	Amount
Current Budgeted Operating Expenditure:			
Add'l Operating Expenditure not included in Current Budget:			
Current Budgeted Capital Expenditure:			
Add'l Capital Expenditure not included in Current Budget:			
Total Expenditures:			

New FTEs requested: ☐ **YES** ☒ **NO**

Future Amendment Needed: ☐ **YES** ☒ **NO**

Additional Note:

RESOLUTION APPROVING PRIVATE RESIDENTIAL ACCESS MAINTENANCE AGREEMENT BETWEEN ADAMS COUNTY AND OAK LEAF SOLAR 37, LLC

Resolution 2020-XXX

WHEREAS, the Adams County Development Standards and Regulations of the County of Adams, State of Colorado, require an Owner to enter into a Private Residential Access Agreement for the continuous maintenance of a private road located within the public right-of-way not built to Adams County standards; and,

WHEREAS, Oak Leaf Solar 37, LLC ("Owner"), is the owner of certain real property located on 48th Avenue 1,700 feet west of Imboden Road; and,

WHEREAS, the Owner and Adams County wish to enter into said Private Residential Access Maintenance Agreement to allow the Owner to build out the segment of 48th Avenue to private road standards and maintain this trail road and indemnify and hold harmless the County for any damages arising from the Owner obligations; and,

WHEREAS, the Adams County Community and Economic Development Department recommends approval of the attached Private Residential Access Maintenance Agreement with Oak Leaf Solar 37 LLC.

NOW, THEREFORE, BE IT RESOLVED, by the Board of County Commissioners, County of Adams, State of Colorado, that the Private Road Access Maintenance Agreement between Adams County and Oak Leaf Solar 37, LLC, a copy of which is attached hereto and incorporated herein by this reference, be approved.

BE IT FURTHER RESOLVED that the Chair of the Board of County Commissioners be authorized to execute said Agreement on behalf of the County of Adams, State of Colorado.

PRIVATE RESIDENTIAL ACCESS MAINTENANCE AGREEMENT

THIS AGREEMENT is made and entered into by and between the County of Adams, State of Colorado, hereinafter called "County" and Oak Leaf Solar 37 LLC, hereinafter called the "Owner."

WITNESSETH:

WHEREAS, the Owner is the Lessee of real property in the County of Adams, State of Colorado, as described in Exhibit "A" attached hereto, and by this reference made a part hereof (the "Property"); and,

WHEREAS, the Owner wishes to build out the road to a private road standard instead of the County Road standard, and the County wishes that the Owner of the Property maintain the trail road and indemnify and hold harmless the County for any damages arising from the Owner obligations under this Agreement.

NOW, THEREFORE, in consideration of the foregoing, the parties hereto promise, covenant, and agree as follows:

1. **Maintenance**. 48th Avenue is open to the general public and Owner shall not post, gate, or otherwise restrict through access to farmers, oil and gas industry, or the general public. The Owner of the Property shall accept responsibility for the continuous maintenance-necessary for adequate access in accordance with the requirements and specifications of the Bennett-Watkins Fire Rescue , of that section of 48th Avenue from Imboden Road, West to where Owners' access leaves the right-of-way of 48th Avenue as a private residential access, Additionally, the Owner's responsibility to maintain the right-of-way of 48th Avenue as a private residential access shall not be construed to create any rights in the use of the right-of-way of 48th Avenue as a private roadway, or to require the Owner to maintain the right-of-way of 48th Avenue as a private roadway for the benefit of any third parties, except as required by applicable Colorado law.

2. **Duration of Maintenance.** The Owner shall be responsible for the maintenance of 48th Avenue right-of-way from Imboden Road west to the where Owner access leaves the right-of-way of 48th Avenue as a private residential access in perpetuity, or (1) until such time as 48th Avenue is designed and constructed to County standards and is accepted by the Board of County Commissioners, County of Adams for maintenance, or (2) until such time as this agreement is superseded by a subsequent Private Residential Access Maintenance Agreement that has been approved by the Board of County Commissioners, County of Adams.

3. **Public dedication of land for right-of-way purposes or other public purpose**. The right of way for 48th Avenue was dedicated by Book 33, Page 279.

4. **Successors and Assigns**. This agreement shall be deemed a covenant running with the real Property as described in said Exhibit "A" attached hereto and shall be binding upon the parties hereto and the heirs, executors, personal representatives, successors, and assigns.

This agreement is hereby executed this _____ day of _____20__.

OWNER:

By: _____
(owner(s) name)

The foregoing instrument was acknowledged before me this _____ day of _____, 20__, by _____.

My commission expires:_____

_____
Notary Public

COUNTY

ATTEST:

BOARD OF COUNTY COMMISSIONERS
ADAMS COUNTY, COLORADO

_____
Clerk of the Board

_____
Chair

Approved as to form:

_____
Adams County Attorney's Office

_____

EXHIBIT A

(Description)_____
_____
_____
OF THE 6TH PRINCIPAL MERIDAN, COUNTY OF ADAMS, STATE OF COLORADO, being the intent to describe the property conveyed by Warranty Deed to (Owner(s))_____ and recorded in the Office of the Adams County Clerk and Recorder on (date)_____ at Reception #_____.

PUBLIC HEARING AGENDA ITEM

DATE OF PUBLIC HEARING: May 19, 2020
SUBJECT: Colorado Rangers Law Enforcement Shared Reserve Training Agreement
FROM: Sheriff, Rick Reigenborn
AGENCY/DEPARTMENT: Sheriff's Office
HEARD AT STUDY SESSION ON:
AUTHORIZATION TO MOVE FORWARD: ☐ **YES** ☐ **NO**
RECOMMENDED ACTION: That the Board of County Commissioners Approves the agreement with the Colorado Rangers Law Enforcement Shared Reserve for training at FLATROCK with Sheriff's Office instructors.

BACKGROUND:

The Colorado Rangers Law Enforcement Shared Reserve would like to utilize FLATROCK and our certified instructors for training 22 of their reserve members. The agreement and fee covers the rental of FLATROCK, materials and the overtime costs for our instructors to provide the academy training in the areas of academics, firearms, arrest control and tactical casualty care.

AGENCIES, DEPARTMENTS OR OTHER OFFICES INVOLVED:

Colorado Rangers Law Enforcement Shared Reserve

ATTACHED DOCUMENTS:

2020 Agreement
Resolution

FISCAL IMPACT:

Please check if there is no fiscal impact ☐. If there is fiscal impact, please fully complete the section below.

Fund: 1 - General

Cost Center: 2008

	Object Account	Subledger	Amount
Current Budgeted Revenue:			0
Additional Revenue not included in Current Budget:	5670		$111065
Total Revenues:			$111065

	Object Account	Subledger	Amount
Current Budgeted Operating Expenditure:			
Add'l Operating Expenditure not included in Current Budget:	various		$111065
Current Budgeted Capital Expenditure:			
Add'l Capital Expenditure not included in Current Budget:			
Total Expenditures:			$111065

New FTEs requested: ☐ **YES** ☒ **NO**

Future Amendment Needed: ☒ **YES** ☐ **NO**

Additional Note:

RESOLUTION APPROVING THE 2020 AGREEMENT BETWEEN COLORADO RANGERS LAW ENFORCEMENT SHARED RESERVE AND THE ADAMS COUNTY SHERIFF'S OFFICE FOR TRAINING

WHEREAS, Colorado Rangers Law Enforcement Shared Reserve (CLER) seeks to enlist the services and facilities of the Adams County Sheriff's Office to provide training (Arrest Control, Academic, Tactical Casualty Combat Care and Firearms) to their Rangers; and,

WHEREAS, the Adams County Sheriff's Office proposes to provide the necessary facilities, instructors, equipment, supplies, coordination, practical supervision and implementation of the CLER Academy program pursuant to the terms and conditions of the attached agreement; and,

WHEREAS, there is no cost to Adams County associated with the CLER agreement since Adams County receives compensation for facility and equipment use and instructor time.

NOW, THEREFORE, BE IT RESOLVED, by the Board of County Commissioners, County of Adams, State of Colorado, that the 2020 Agreement between Colorado Rangers Law Enforcement Shared Reserve and the Adams County Sheriff's Office, a copy of which is attached hereto and incorporated herein by this reference, be and hereby is approved.

BE IT FURTHER RESOLVED that the Chair is authorized to execute said agreement on behalf of Adams County.

ACADEMY AGREEMENT

AGREEMENT made this __28th___ day of __April_____, 2020 by and between the Adams County Sheriff's Academy, PROVIDER, and Colorado Rangers Law Enforcement Shared Reserve (CLER), USER.

It is agreed by and between parties to this agreement that the Provider shall provide and the User shall use firearms, arrest control, and academic training facilities as follows:

1. All training pursuant to this agreement shall be conducted at the Adams County Sheriff's Office, FLATROCK Regional Training Center. During any and all training segments of the skills program (Firearms, Arrest Control, and Academic) and Tactical Combat Casualty Care, First Aid/ CPR, the Director of the Adams County Sheriff's Academy shall have the right in his sole discretion and without limitation to dismiss any trainee in the program.
2. The provider shall provide instructors and necessary materials for the courses of training mentioned above. The user will provide weapons, holsters, magazine pouches, ammunition, ballistic vest, and belt approved by the provider to be utilized in the firearms training course.
3. The training will be conducted on the dates and the times reflected in the schedule appended hereto as Appendix 1. Each party to this agreement shall designate a contact person for all communications pursuant to this agreement. The designated contact person for the Adams County Sheriff's Academy is Commander John Bitterman 720-523-7502. The designated contact person for CLER shall be Academy Director Sergeant Lee Reedy 303-502-2671.
4. The provider shall have the sole and exclusive right to devise and conduct the training which shall be conducted by instructors approved by the Adams County Sheriff's Academy Director or his designee, and in accordance with Colorado Peace Officer Standards and Training (P.O.S.T.) standards and requirements.

5. The user shall assume full responsibility for payment of all Federal, State and local taxes or contributions imposed or required under workmen's compensation, unemployment insurance, social security and income tax laws with respect to all user employees engaged in performance of this agreement. The user shall obtain and maintain liability insurance in the amount of at least one million ($1,000,000.00) dollars with the provider as an additional insured.
6. To the extent allowed by law, user and all trainees, agents and employees shall indemnify and hold harmless Adams County and the Adams County Sheriff's Office and their agents and employees against all loss, liability claims or actions resulting from user or trainee's participation in the training.
7. The fee for such training, is determined by the following rate:
    a. Lead Instructor rate $75/ hour
    b. Assistant Instructor rate $65/ hour
    c. The fee for such training includes the costs of materials for the above described course shall be determined by the following calculations:

FIREARMS:

22 Students	4:1 Ratio 72 Hours required by POST	
Lead Instructor	$75/ hr X 72 X 2 classes	$10,800
Asst. Instructor	$65/hr X 72 = $4,680 X 2 classes 22 Students / 2 classes (4:1 ratio) = 3 AI per class	$28,080
Range Fees	$200 per block X 32 blocks=	$6,400
TOTAL RANGE EXPENSE =		**$45,280**

ARREST CONTROL:

22 Students	10:1 Ratio 62 Hours required by POST	
Lead Instructor	$75/hr X 62 X 2 classes	$9,300
Asst. Instructor	$65/hr X 62 = $4,030 22 Students / 2 classes (10:1 ratio) = 2 AI per class	$16,900
Facility Fee	$200.00 per block X 28 blocks	$5,600
Arrest Control Text Books	$45.00 X 32	$990
TOTAL ARREST CONTROL EXPENSE=		**$32,790**

ACADEMIC:

22 Students	104 Hours required by POST	
Lead Instructor	$75/hr X 104 Hours	$7,800
Asst. Instructor	$65/hr X 57.5 Hours 4 AI per class for Academic Skills	$14,950

- Traffic Skills
- Pedestrian Contact
- Preliminary Investigation
- Crime Scenes
- Vehicle Contacts/Searches
- TCCC
- Building Search
- In-progress Calls
- Additional Academic Skills

Facility Fee	$100 per block X 26 blocks	$2,600
CRS Text Books	$42 per book X 32	$924
TOTAL ACADEMIC EXPENSE =		**$26,276**

TOTAL LABOR COST	**$87,830**
FICA (6.2%)/MEDICARE (1.45%) EXPENSE =	**$6,719**

ACSO TRAINING GRAND TOTAL	**$111,065.00**

8. The fee in the amount of **$111,065.00** is to be paid by the user to the provider not later than one week prior to the beginning of the course described above. This fee is for **22** students. If the number of students varies which would alter the student/instructor ratio, the fee will be adjusted accordingly.

    a. Any remaining credit from the previous year's contract shall be utilized by December 31, 2021.
    b. Unused balance credit will be refunded to CLER via check by December 31, 2021.

9. If the student(s) fail to complete the training during the skills section the students will be responsible for instructor fees. This agreement becomes effective May 29, 2020 and the final class will be November 21, 2020.
10. The relationship of the parties is critical and personal. This agreement may not be assigned, sold or in any way transferred without the express written approval of the parties to this agreement.
11. This agreement may be terminated immediately for cause by either the provider or user. This agreement may be terminated without cause by either party upon the provision of 90 days written notice.
12. Each signatory to this agreement represents that he has sufficient authority to bind the organization which he/she represents.

Adams County, Colorado	Colorado Ranger Law Enforcement Shared Reserve (CLER)
4430 S. Adams County Parkway Brighton, CO 80601	P.O. Box 460927 Denver, CO 80246
ADAMS COUNTY, COLORADO BOCC CHAIR	CLER AGECNY CHIEF
_____	_____
Emma Pinter	Ronald Abramson
Date:_____	Date: 1:20 PM, May 4, 2020

PUBLIC HEARING AGENDA ITEM

DATE OF PUBLIC HEARING: May 19, 2020
SUBJECT: On-Call Painting Services
FROM: Raymond H. Gonzales, County Manager Chris Kline, Deputy County Manager Nancy Duncan, Interim Finance Director Jennifer Tierney Hammer, Procurement and Contracts Manager
AGENCY/DEPARTMENT: Facilities and Fleet Management Department
HEARD AT STUDY SESSION ON: N/A
AUTHORIZATION TO MOVE FORWARD: ☐ **YES** ☐ **NO**
RECOMMENDED ACTION: That the Board of County Commissioners approves Amendment Two to the agreement with Southwestern Painting & Decorating, Inc., for On-Call Painting Services.

BACKGROUND:

The Facilities and Fleet Management Department requires painting services in County buildings to maintain a quality appearance. In July 2018, the Board of County Commissioners approved an agreement with Southwestern Painting & Decorating, Inc., to provide On-Call Painting Services in all County buildings.

The Facilities and Fleet Management Department is pleased with the On-Call Painting Services provided by Southwestern Painting & Decorating, Inc., and recommends that Amendment Two to renew the agreement for one additional year in the not to exceed amount of $550,000.00 be approved. This is the second of the two one-year optional renewals allowed on the contract.

AGENCIES, DEPARTMENTS OR OTHER OFFICES INVOLVED:

Facilities and Fleet Management Department

ATTACHED DOCUMENTS:

Resolution

FISCAL IMPACT:

Please check if there is no fiscal impact ☐. If there is fiscal impact, please fully complete the section below.

Fund: 1	
Cost Center: 1130	

	Object Account	Subledger	Amount
Current Budgeted Revenue:			
Additional Revenue not included in Current Budget:			
Total Revenues:			

	Object Account	Subledger	Amount
Current Budgeted Operating Expenditure:	7845		$550,000
Add'l Operating Expenditure not included in Current Budget:			
Current Budgeted Capital Expenditure:			
Add'l Capital Expenditure not included in Current Budget:			
Total Expenditures:			$550,000

New FTEs requested: ☐ **YES** ☒ **NO**

Future Amendment Needed: ☐ **YES** ☐ **NO**

Additional Note:

BOARD OF COUNTY COMMISSIONERS FOR
ADAMS COUNTY, STATE OF COLORADO

RESOLUTION APPROVING AMENDMENT TWO TO THE AGREEMENT BETWEEN ADAMS COUNTY AND SOUTHWESTERN PAINTING & DECORATING, INC., FOR ON-CALL PAINTING SERVICES

WHEREAS, the Board of County Commissioners approved an agreement in July 2018, for On-Call Painting Services for all County buildings with Southwestern Painting & Decorating Inc.; and,

WHEREAS, the Facilities and Fleet Management Department wishes to renew the agreement with Southwestern Painting & Decorating, Inc., for one additional year; and,

WHEREAS, Southwestern Painting & Decorating, Inc., has agreed to provide the On-Call Painting Services in the not exceed amount of $550,000.00.

NOW, THEREFORE, BE IT RESOLVED, by the Board of County Commissioners, County of Adams, State of Colorado, that Amendment Two to the Agreement between Adams County and Southwestern Painting & Decorating, Inc., for On-Call Painting Services is hereby approved.

BE IT FURTHER RESOLVED that the Chair is hereby authorized to sign Amendment Two to the agreement with Southwestern Painting & Decorating, Inc., on behalf of Adams County, after negotiation and approval as to form is completed by the County Attorney's Office.

PUBLIC HEARING AGENDA ITEM

DATE OF PUBLIC HEARING: May 19, 2020
SUBJECT: Purchase of a BOMAG/CR 1030T Paver
FROM: Raymond H. Gonzales, County Manager Chris Kline, Deputy County Manager Nancy Duncan, Interim Finance Director Jennifer Tierney Hammer, Procurement and Contracts Manager
AGENCY/DEPARTMENT: Facilities and Fleet Management Department
HEARD AT STUDY SESSION ON: N/A
AUTHORIZATION TO MOVE FORWARD: ☐ **YES** ☐ **NO**
RECOMMENDED ACTION: That the Board of County Commissioners approves the use of a Cooperative Agreement with Power Equipment Company for the purchase of an asphalt paver.

BACKGROUND:

The Adams County Facilities and Fleet Management Department (Fleet) has budgeted for the replacement of a street paver in 2020. The old equipment has reached and exceeded its life cycle value. The equipment will be replaced with a BOMAG/CR 1030T paver.

Sourcewell is a Cooperative that formally solicits and awards contracts for the purchase of many products and services. By utilizing the cooperative contract, the County can streamline the procurement process and receive competitive pricing. Sourcewell awarded the agreement to Power Equipment Company which will result in a discount of 28.5% off of the BOMAG's list price. The contract award includes cooperative language, the use of these agreements adheres to the Adams County Purchasing Policy, Appendix E – Cooperative, Single, and Sole Source Purchases.

It is recommended that the Purchase Order be issued to Power Equipment Company, for a BOMAG/CR 1030T paver in the not to exceed amount of $458,388.00.

AGENCIES, DEPARTMENTS OR OTHER OFFICES INVOLVED:

Facilities and Fleet Management Department

ATTACHED DOCUMENTS:

Resolution

FISCAL IMPACT:

Please check if there is no fiscal impact ☐. If there is fiscal impact, please fully complete the section below.

Fund: 6	
Cost Center: 9111	

	Object Account	Subledger	Amount
Current Budgeted Revenue:			
Additional Revenue not included in Current Budget:			
Total Revenues:			

	Object Account	Subledger	Amount
Current Budgeted Operating Expenditure:	9165	91112017	$500,000
Add'l Operating Expenditure not included in Current Budget:			
Current Budgeted Capital Expenditure:			
Add'l Capital Expenditure not included in Current Budget:			
Total Expenditures:			$500,000

New FTEs requested: ☐ **YES** ☒ **NO**

Future Amendment Needed: ☐ **YES** ☐ **NO**

Additional Note:

BOARD OF COUNTY COMMISSIONERS FOR
ADAMS COUNTY, STATE OF COLORADO

RESOLUTION APPROVING A PURCHASE ORDER BETWEEN ADAMS COUNTY AND POWER EQUIPMENT COMPANY FOR A BOMAG CR 1030T PAVER

WHEREAS, the Facilities and Fleet Management Department budgeted for the equipment replacement of a street paver in 2020; and,

WHEREAS, Sourcewell formally solicited and awarded a cooperative agreement with Power Equipment Company which included cooperative language. The use of cooperative agreements adheres to the Adams County Purchasing Policy, Appendix E- Cooperative, Single, and Sole Source Purchases; and,

WHEREAS, Power Equipment Company agrees to provide a BOMAG/CR 1030T paver in the not to exceed amount of $458,388.00.

NOW, THEREFORE, BE IT RESOLVED, by the Board of County Commissioners, County of Adams, State of Colorado, that the Purchase Order to Power Equipment Company for a BOMAG/CR 1030T paver is hereby approved.

BE IT FURTHER RESOLVED, that the Purchasing Division is hereby authorized to sign the Purchase Order to Power Equipment Company.